Refrigerant R410A

AIR CONDITIONER

Duct type

DESIGN & TECHNICAL MANUAL

INDOOR

ARGA18FMTA
ARGA25FMTA

OUTDOOR

AOGA18FBTAH

AOGA25FBTAH

FUJITSU GENERAL LIMITED

1. INDOOR UNIT

DUCT TYPE:

ARGA18FMTA
ARGA25FMTA

DTR_AR087E_02
2015.02.05

DUCT TYPE
ARGA18-25FMTA

CONTENTS

1. INDOOR UNIT

1. FEATURES

■ MODELS

ARGA18FMTA / AOGA18FBTAH
ARGA25FMTA / AOGA25FBTAH

AOGA18FBTAH

AOGA25FBTAH

■ FEATURES

● Installation styles

Embedded in Ceiling

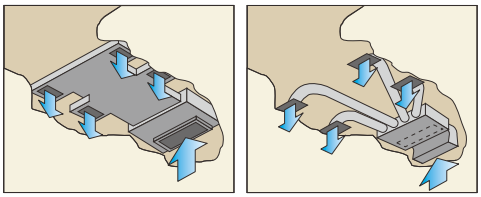

Hanging from Ceiling

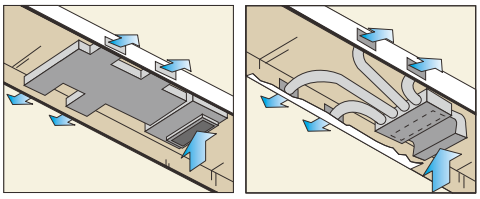

● Slim & compact design

In the case of rear suction type, as seen from lower rear part.

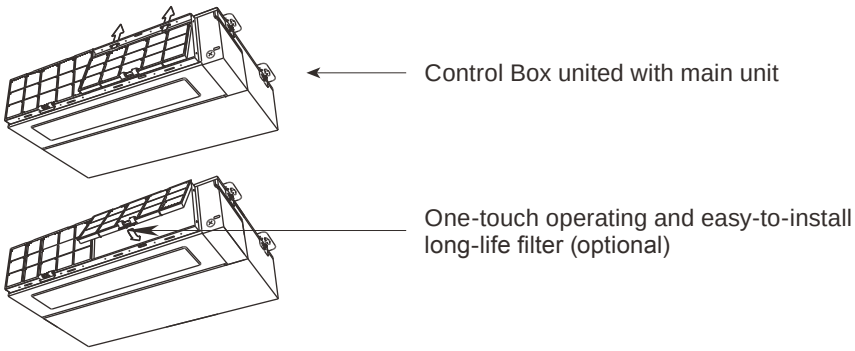

In addition to the slim height of 270 mm, further compactification is attained by reducing 65 mm from the width with the flanking control box embedded inside the chassis.

● Easy maintenance

The fan and motor is easily accessible by the divided panel structure.

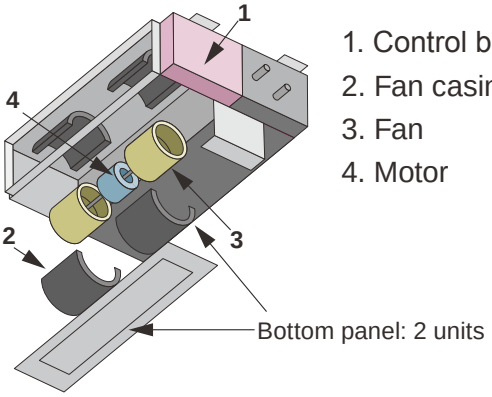

1. Control box
2. Fan casing
3. Fan
4. Motor

Structural improvement is attained by making the bottom panel in two pieces, front and rear.

The internal fan casing is also manufactured in two pieces, namely upper and lower. The maintenance of the motor and fan can be easily carried out by removing the rear panel and the lower part of the casing while leaving the main chassis installed.

DUCT TYPE
ARGA18-25FMTA

● Quiet operation

Quiet operation at 25 dB (A) is possible in quiet mode.

● Economy operation

The power consumption can be reduced.

● Operation in high ambient temp

The operation is secured under the ambient temperature of up to 52 degrees celsius.

Cooling
21 to 52°C

2. WIRED REMOTE CONTROLLER

■ FEATURES

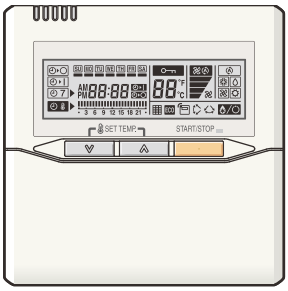

- Various timer setup (ON / OFF / WEEKLY) are possible.
- Equipped with weekly timer as standard function.(Start/Stop function is twice per day for a week)
- When setting up the timer, start/stop and a temperature setup can be changed.
- When a failure occurs, the error code is displayed.
- Error history.(Last 16 error codes can be accessed.)
- Up to 16 indoor units can be simultaneously controlled.
- The room temperature can be controlled by being detective the temperature accurately with Built-in thermo sensor.

● Simple function setting

Setting of the air conditioner selection function is performed by remote controller.

● High performance and compact size

Individual control + Thermo sensor + Weekly timer + Setback timer = Wired remote controller

Built-in timers

Weekly timer

Possible to set ON/OFF time to operate twice each day of the week.

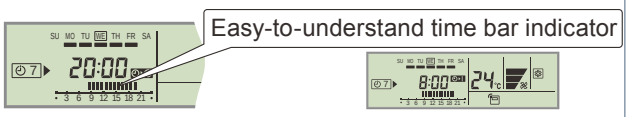

Setup screen example
(Set to Wednesday: 8:00 to 20:00.)

Screen after setup

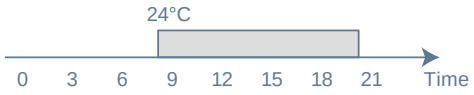

Setback timer

Possible to set temperature for two time spans and for each day of the week.

Setup screen example
(Set from Sunday to Saturday: 12:00 to 15:00, 28 °C.)

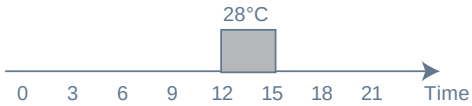

At "Weekly timer" + "Set back timer" setup

24°C → 28°C → 24°C

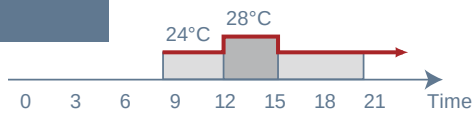

● Easy-to-understand operation

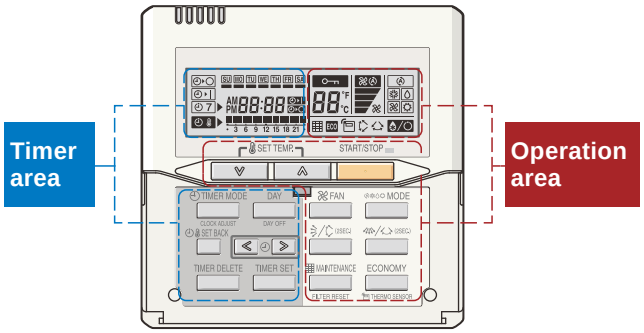

[Variable timer control]

The operation/display sections are zoned according to time and operation, enabling variable programming to match application.

● Simple installation

Components are compatible with standard switch boxes. Flat back construction allows equipment to be installed wherever it is needed.

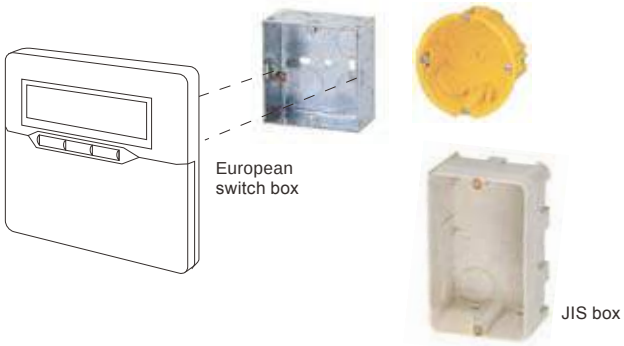

DUCT TYPE
ARGA18-25FMTA

■ FUNCTIONS

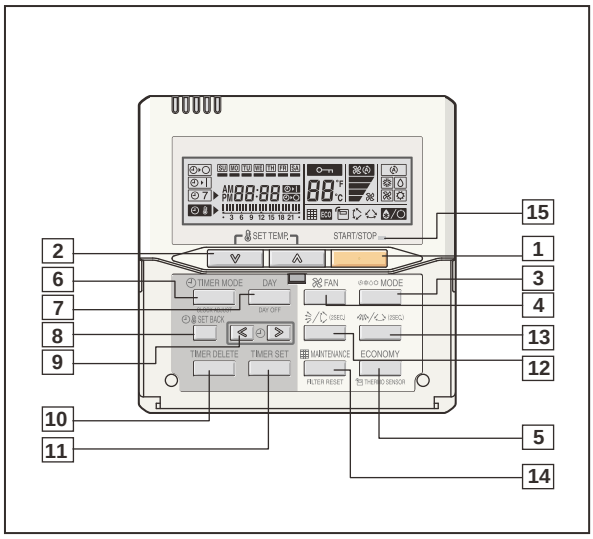

Display panel

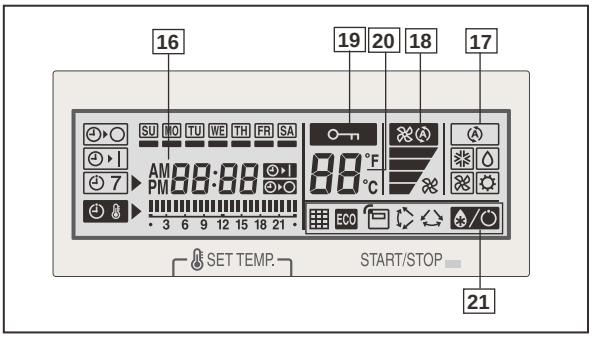

1 **START/STOP button**
Pressed to start and stop operation.

2 **SET TEMP. button**
Selects the setting temperature.

3 **MODE button**
Selects the operating mode (AUTO, COOL, DRY, FAN).

4 **FAN button**
Selects the fan speed (AUTO, HIGH, MED, LOW, QUIET).

5 **ECONOMY button**
Turns the economy efficient mode on and off.

6 **TIMER MODE (CLOCK ADJUST) button**
Selects the timer mode (OFF TIMER, ON TIMER, WEEKLY TIMER). Set the current time.

7 **DAY (DAY OFF) button**
Temporarily cancels of one day timer.

8 **SET BACK button**
Pressed to select the set back timer.

9 **Set time button**
Pressed to set time.

10 **TIMER DELETE button**
The schedule of a weekly timer is deleted.

11 **TIMER SET button**
Sets the date, hour, minute and on-off time.

12 **Vertical airflow direction and swing button**
Push for two seconds to change the swing mode.

13 **Horizontal airflow direction and swing button**
Push for two seconds to change the swing mode.

14 **FILTER RESET button**

15 **Operation lamp**
Lights during operation and when the timer is on.

16 **Timer and clock indicator**

17 **Operation mode indicator**

18 **Fan speed indicator**

19 **Operation lock indicator**

20 **Temperature indicator**

21 **Function indicator**
- Defrost indicator
- Thermo sensor indicator
- Economy indicator
- Vertical swing indicator
- Horizontal swing indicator
- Filter indicator

NOTE: Functions will be different due to type of indoor unit.
For details please see operation manual.

■ DIMENSION

[Unit: mm]

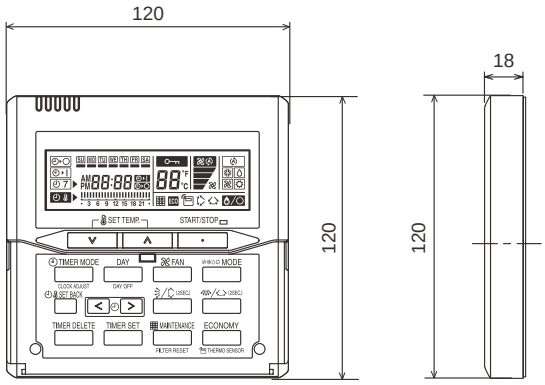

Front View

Side View

■ SPECIFICATION

SIZE (H x W x D mm)	120 x 120 x 18
WEIGHT (g)	160
CABLE LENGTH (m)	10
POWER (V)	12

■ WIRING SPECIFICATIONS

Use	Size	Wire type	Remarks
Remote controller cable	0.33 mm^2 (22 AWG)	Polar 3 core	Use sheathed PVC cable

3. SPECIFICATIONS

Type					DUCTED MODEL	
					COOLING ONLY	
Model name					ARGA18FMTA	ARGA25FMTA
Power source					220 / 240 V ~ 50 Hz	
Available voltage range					198 to 264 V	
COOLING (T1 condition)						
	Capacity			kW	5.20 / 5.20	6.45 / 6.45
				Btu/h	17,800 / 17,800	22,000 / 22,000
	Input power			kW	1.51 / 1.53	1.88 / 1.91
	Current			A	7.0 / 6.5	8.8 / 8.5
	EER			Btu/hW	11.79 / 11.63	11.70 / 11.52
	Sensible capacity			kW	4.10 / 4.10	5.08 / 5.08
	Power factor			%	98.1 / 98.1	97.1 / 93.6
	Moisture removal			l/h (pints/h)	1.6 (2.8)	1.9 (3.3)
Maximum operating current *1		Cooling		A	13.5	16.7
Fan	Airflow rate	Cooling	High	m^3/h	1,050	1,200
			Med		860	960
			Low		740	820
			Quiet		670	750
	Type × Q'ty				Sirocco × 2	
	Motor output			W	106	
Recommended static pressure				Pa	30 to 150	
Sound pressure level *2		Cooling	High	dB(A)	29	31
			Med		27	29
			Low		26	27
			Quiet		25	25
Heat exchanger type		Dimensions (H × W × D)		mm	294 × 1000 × 39.9	
		Fin pitch			1.4	
		Rows x Stages			3 × 14	
		Pipe type			Copper	
		Fin type			Aluminium	
Enclosure		Material			Steel	
		Colour			-	
Dimensions (H×W ×D)	Net			mm	270 × 1,135 × 700	
	Gross				300 × 1,320 × 790	
Weight	Net			kg	38	
	Gross				45	
Connection pipe	Size	Liquid		mm	Ø 6.35 (Ø 1/4 in.)	
		Gas			Ø 15.88 (Ø 5/8 in.)	
	Method				Flare	
Operation range		Cooling		°C	18 to 32	
				%RH	80 or less	
Remote controller type					Wired	
Drain port	Material				Steel	
	Size			mm	Ø 36.0 (I.D.), Ø 38.0 (O.D.)	

NOTES :

- Specifications are based on the following conditions:
  Cooling (T1) : Indoor temperature of 27 °CDB / 19 °CWB, and outdoor temperature of 35 °CDB / 24 °CWB.
  Standard static pressure : 35 Pa
  Pipe length : 7.5 m, Height difference : 0 m. (Outdoor unit–Indoor unit)
- The protective function might work when using it in environment out of the temperature range mentioned above.
- Drain hose should be locally purchased.

*1: The maximum current is the maximum value when operated within the operation range.

*2: These are the measured values in the manufacturer's anechoic chamber.
Because of the surrounding sound environment, the sound levels measured in actual installation conditions might be higher than the specified values here.

4. DIMENSIONS

■ MODEL: ARGA18FMTA, ARGA25FMTA

(Unit: mm)

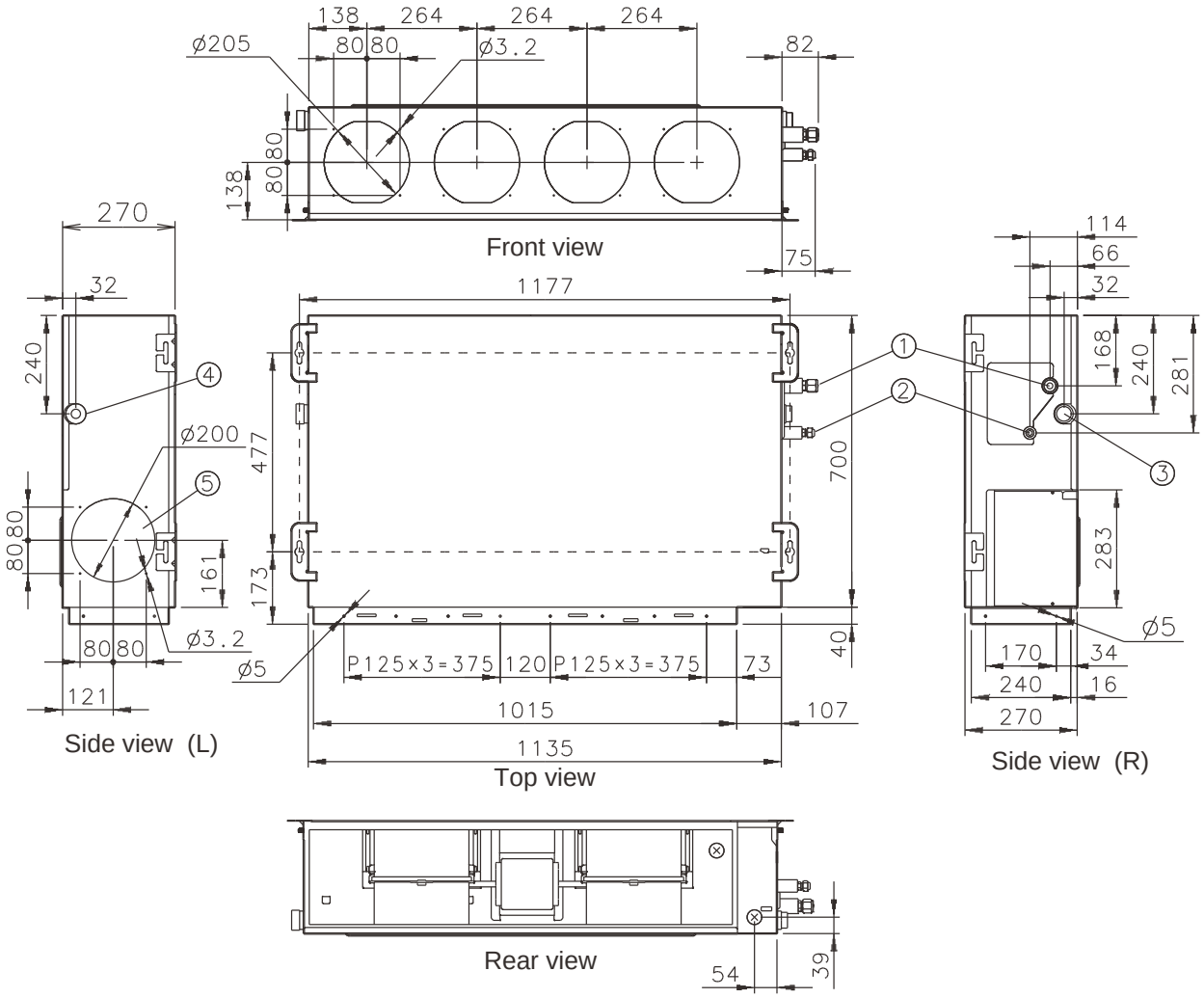

① Refrigerant piping flare connection (Gas)
② Refrigerant piping flare connection (Liquid)
③ Drain piping connection
④ Drain piping connection with cap.
⑤ Knock out hole for fresh air.

■ INSTALLATION PLACE

(Unit: mm)

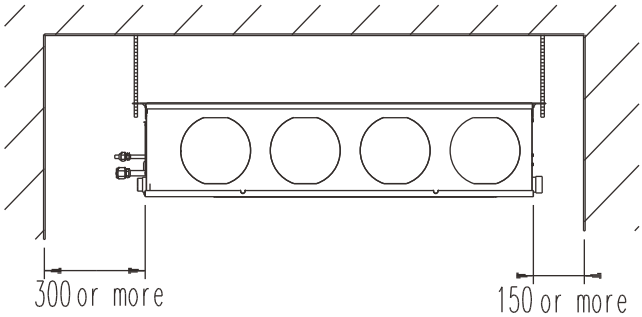

■ MAINTENANCE HOLE

It shall be possible to install and remove the control box.

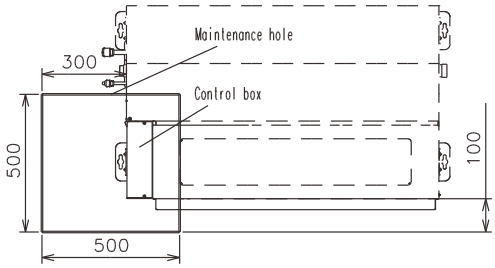

It shall be possible to install and remove the control box, fan units and filter.

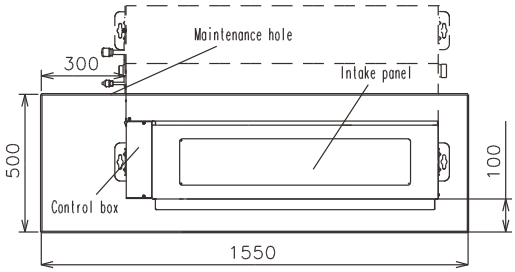

■ WHEN USING A SQUARE DUCT

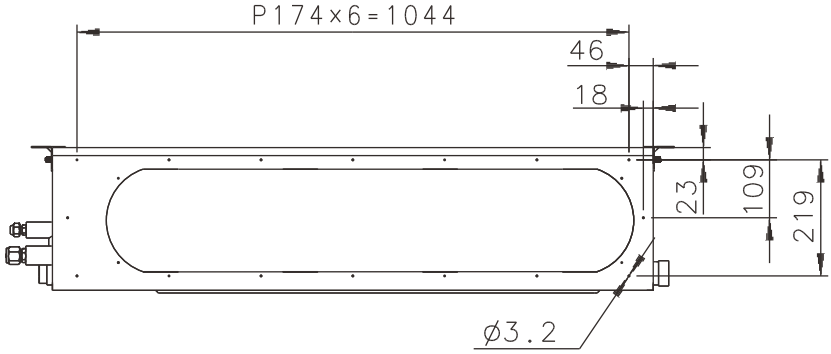

■ BOTTOM AIR INTAKE HOLE

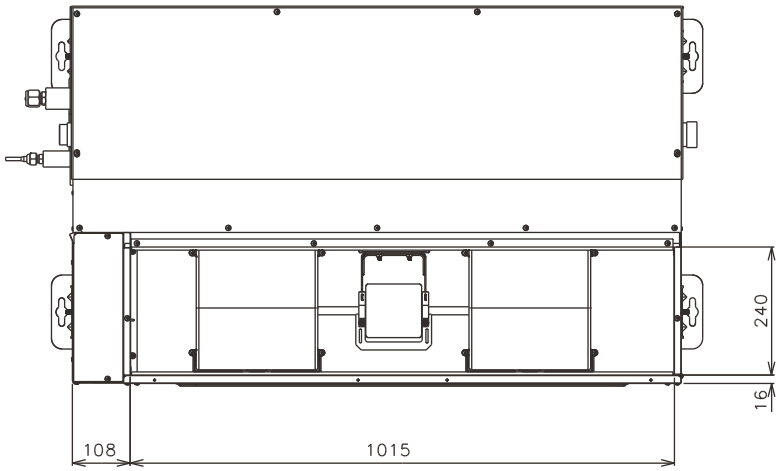

5. WIRING DIAGRAMS

■ MODEL: ARGA18FMTA

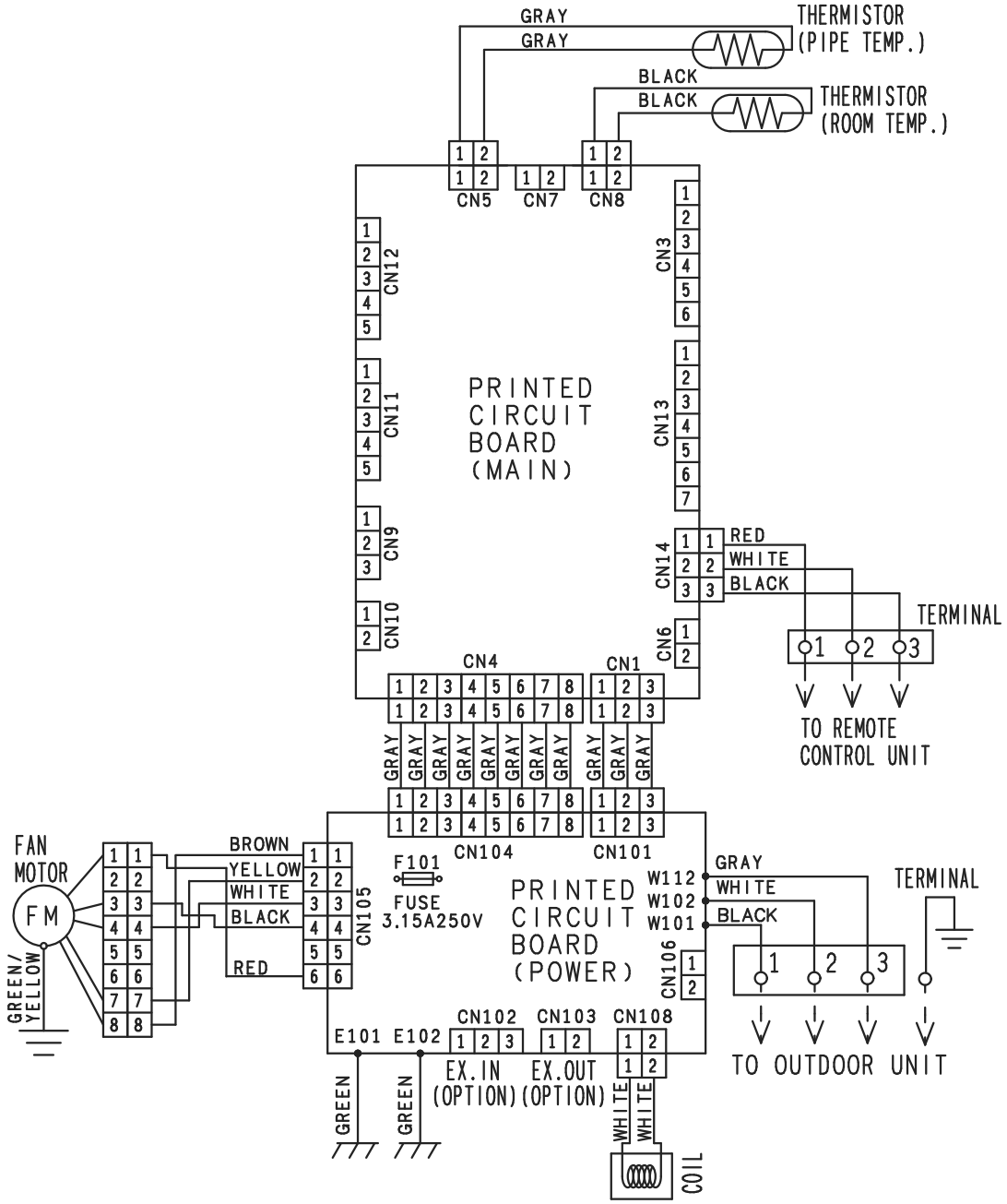

DUCT TYPE
ARGA18-25FMTA

■ MODEL: ARGA25FMTA

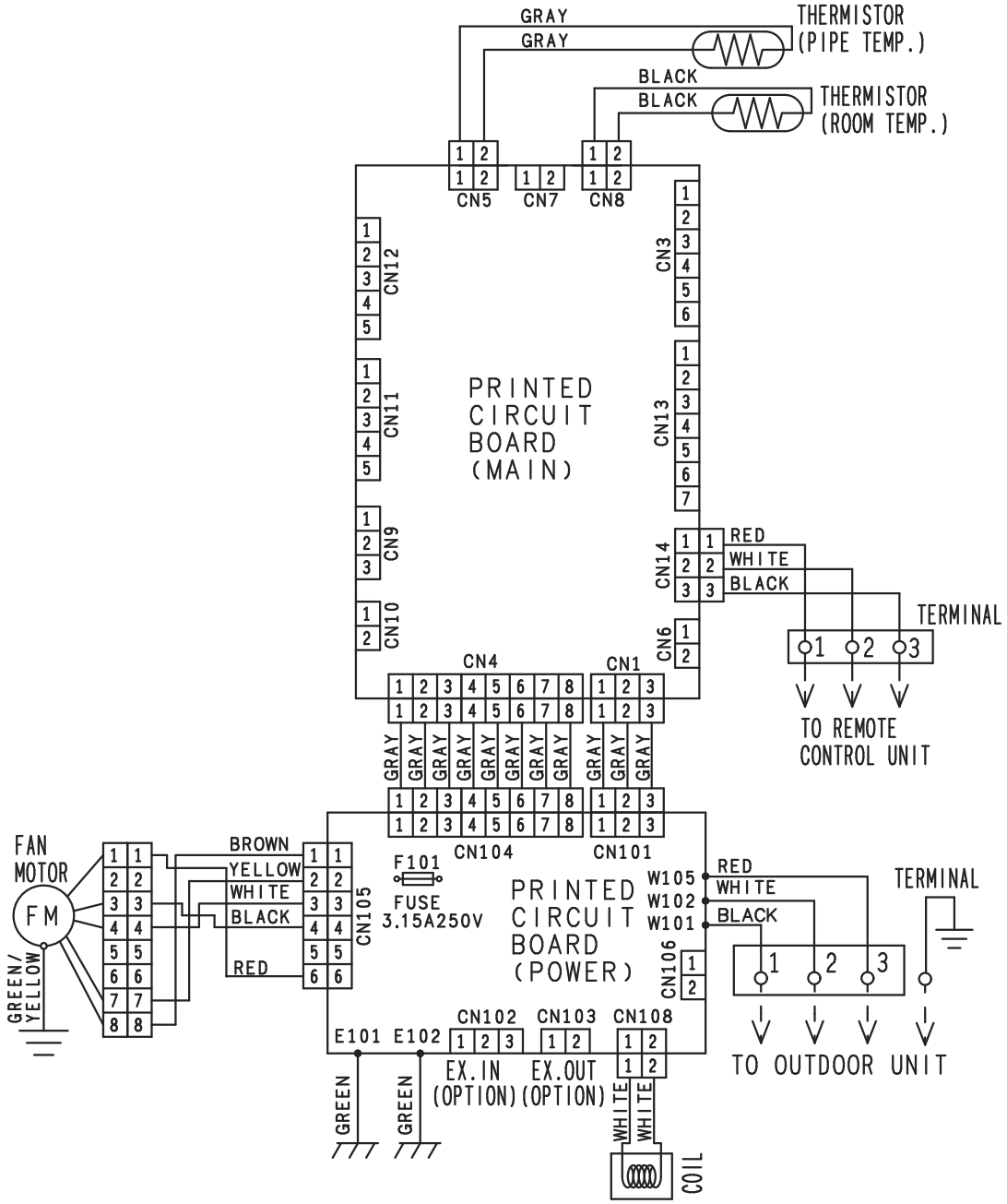

6. CAPACITY TABLE

6-1. COOLING CAPACITY

This table is created using the maximum capacity.

■ MODEL: ARGA18FMTA

AFR	17.5

		Indoor temperature																				
	°CDB	18			21			23			25			27			29			32		
	°CWB	12			15			16			18			19			21			23		
Outdoor temperature	°CDB	TC	SHC	IP	TC	SHC	IP	TC	SHC	IP	TC	SHC	IP	TC	SHC	IP	TC	SHC	IP	TC	SHC	IP
	21	4.48	3.84	1.15	4.99	3.86	1.17	5.16	4.20	1.17	5.50	4.21	1.19	5.67	4.54	1.19	6.01	4.53	1.21	6.35	4.82	1.21
	25	4.45	3.79	1.24	4.95	3.81	1.27	5.12	4.14	1.27	5.45	4.16	1.29	5.62	4.49	1.29	5.96	4.47	1.31	6.29	4.76	1.32
	30	4.32	3.67	1.37	4.82	3.69	1.39	4.98	4.01	1.39	5.30	4.03	1.41	5.47	4.35	1.42	5.80	4.33	1.43	6.12	4.62	1.44
	35	4.11	3.46	1.47	4.58	3.48	1.50	4.73	3.78	1.51	5.04	3.80	1.52	5.20	4.10	1.53	5.51	4.08	1.54	5.82	4.35	1.56
	40	3.89	3.26	1.98	4.33	3.28	2.01	4.48	3.56	2.02	4.78	3.58	2.04	4.93	3.86	2.05	5.22	3.84	2.07	5.52	4.10	2.09
	45	3.57	3.09	2.11	3.98	3.11	2.15	4.12	3.38	2.15	4.39	3.39	2.18	4.59	3.66	2.19	4.79	3.65	2.21	5.07	3.88	2.23
	52	3.06	2.86	2.33	3.41	2.87	2.37	3.52	3.13	2.38	3.76	3.13	2.40	3.87	3.39	2.42	4.11	3.37	2.44	4.34	3.59	2.46

■ MODEL: ARGA25FMTA

AFR	20.0

		Indoor temperature																				
	°CDB	18			21			23			25			27			29			32		
	°CWB	12			15			16			18			19			21			23		
Outdoor temperature	°CDB	TC	SHC	IP	TC	SHC	IP	TC	SHC	IP	TC	SHC	IP	TC	SHC	IP	TC	SHC	IP	TC	SHC	IP
	21	5.55	4.76	1.43	6.18	4.78	1.46	6.39	5.20	1.47	6.82	5.22	1.48	7.03	5.63	1.49	7.45	5.61	1.50	7.87	5.98	1.51
	25	5.51	4.70	1.55	6.14	4.73	1.58	6.35	5.13	1.59	6.76	5.15	1.61	6.97	5.56	1.61	7.40	5.54	1.63	7.81	5.90	1.64
	30	5.36	4.55	1.71	5.97	4.58	1.73	6.17	4.97	1.74	6.58	4.99	1.76	6.78	5.39	1.77	7.19	5.37	1.79	7.60	5.72	1.80
	35	5.09	4.29	1.84	5.68	4.31	1.87	5.87	4.69	1.88	6.26	4.71	1.90	6.45	5.08	1.91	6.84	5.06	1.93	7.22	5.40	1.95
	40	4.83	4.04	2.47	5.37	4.06	2.51	5.56	4.41	2.52	5.93	4.43	2.55	6.11	4.78	2.56	6.48	4.76	2.59	6.85	5.08	2.61
	45	4.43	3.82	2.64	4.94	3.85	2.68	5.11	4.19	2.69	5.45	4.20	2.72	5.69	4.53	2.73	5.94	4.52	2.76	6.29	4.81	2.79
	52	3.80	3.54	2.91	4.23	3.56	2.96	4.37	3.87	2.97	4.66	3.88	3.00	4.80	4.20	3.02	5.10	4.18	3.05	5.38	4.45	3.08

AFR : Airflow Rate (m^3/min)
TC : Total Capacity (kW)
SHC: Sensible Heat Capacity (kW)
IP : Input Power (kW)

DUCT TYPE
ARGA18-25FMTA

7. FAN PERFORMANCE AND CAPACITY

7-1. NORMAL MODE

■ MODEL: ARGA18FMTA

			Static pressure (Pa)									
			13	16	20	22	25	28	30	34	35	38
FAN SPEED	Hi	m^3/h	-	-	-	-	-	1150	1120	1070	1050	950
		l/s	-	-	-	-	-	319	311	297	292	264
		CFM	-	-	-	-	-	677	659	630	618	559
	Med	m^3/h	-	-	-	860	795	-	-	-	-	-
		l/s	-	-	-	239	221	-	-	-	-	-
		CFM	-	-	-	506	468	-	-	-	-	-
	Low	m^3/h	-	820	740	690	-	-	-	-	-	-
		l/s	-	228	206	192	-	-	-	-	-	-
		CFM	-	483	436	406	-	-	-	-	-	-
	Quiet	m^3/h	740	600	-	-	-	-	-	-	-	-
		l/s	206	167	-	-	-	-	-	-	-	-
		CFM	436	353	-	-	-	-	-	-	-	-

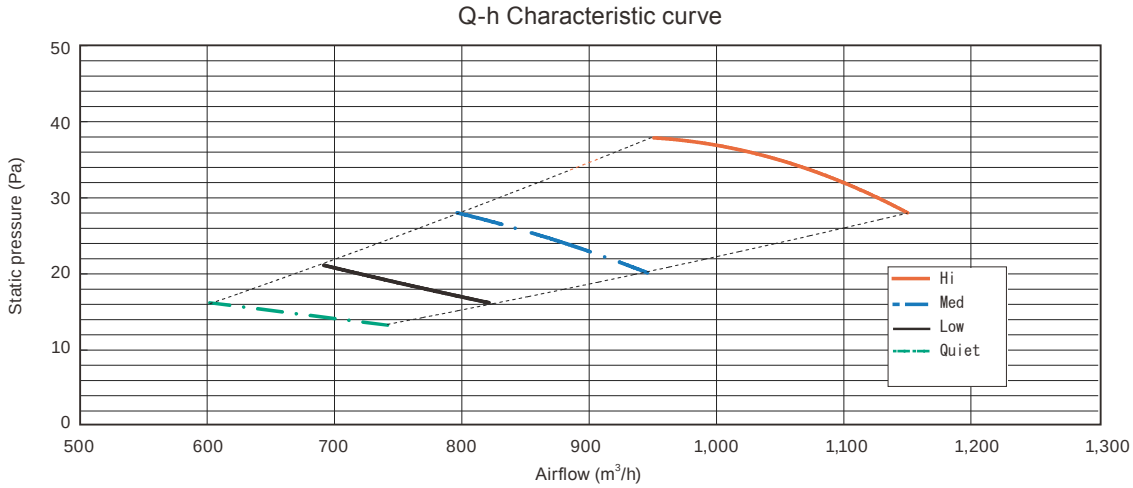

● Cooling

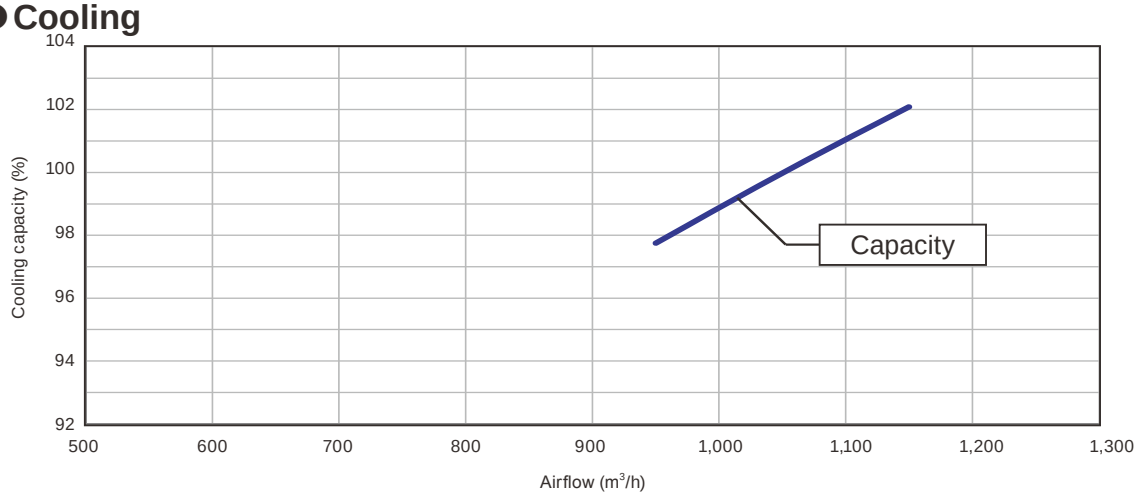

DUCT TYPE
ARGA18-25FMTA

■ MODEL: ARGA25FMTA

			Static pressure (Pa)							
			6	11	14	21	25	30	35	40
FAN SPEED	Hi	m^3/h	-	-	-	-	-	1300	1200	1100
		l/s	-	-	-	-	-	361	333	306
		CFM	-	-	-	-	-	765	706	647
	Med	m^3/h	-	-	-	980	910	830	-	-
		l/s	-	-	-	272	254	231	-	-
		CFM	-	-	-	577	539	489	-	-
	Low	m^3/h	-	-	825	690	-	-	-	-
		l/s	-	-	229	192	-	-	-	-
		CFM	-	-	486	406	-	-	-	-
	Quiet	m^3/h	630	525	-	-	-	-	-	-
		l/s	175	146	-	-	-	-	-	-
		CFM	371	309	-	-	-	-	-	-

Q-h Characteristic curve

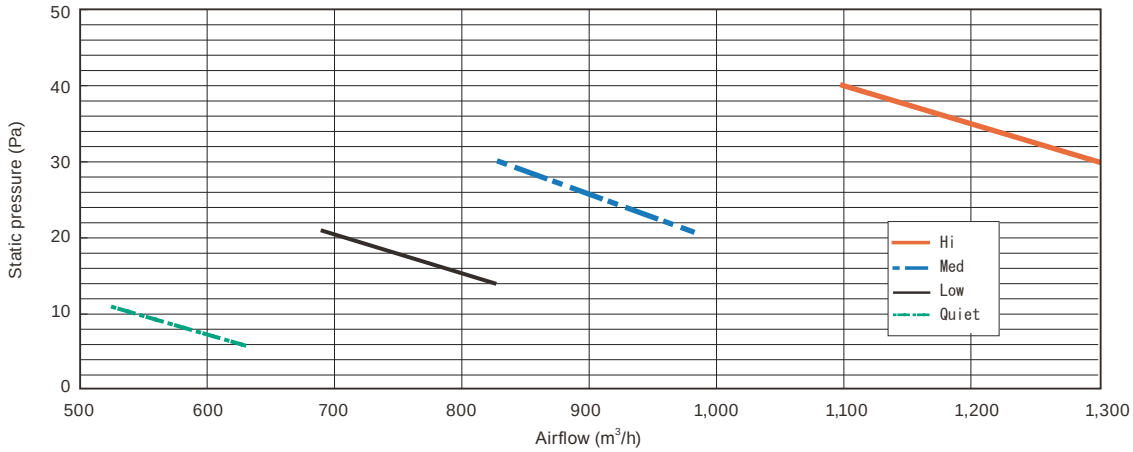

● Cooling

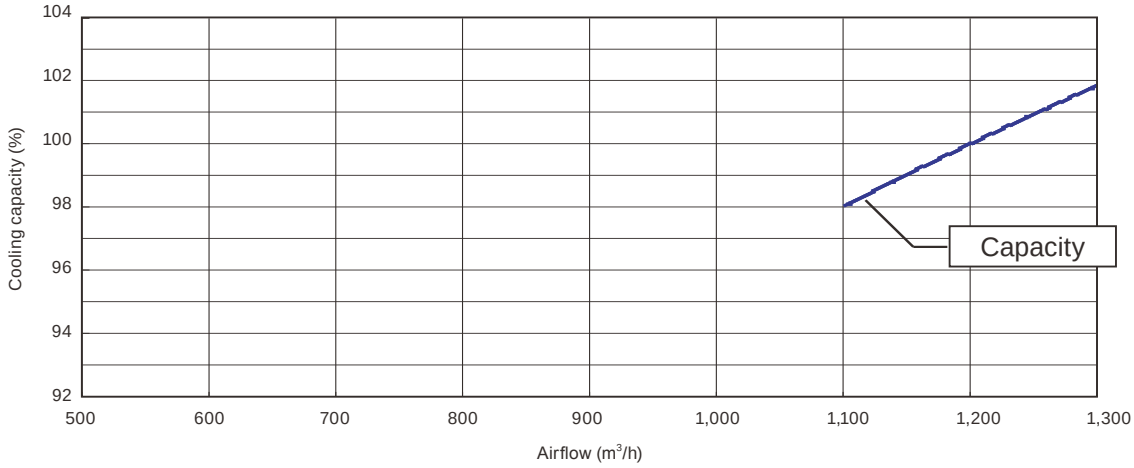

DUCT TYPE
ARGA18-25FMTA

7-2. STATIC PRESSURE MODE 1

■ MODEL: ARGA18FMTA

			Static pressure (Pa)							
			18	22	29	33	41	47	56	64
FAN SPEED	Hi	m^3/h	-	-	-	-	-	-	1150	950
		l/s	-	-	-	-	-	-	319	264
		CFM	-	-	-	-	-	-	677	559
	Med	m^3/h	-	-	-	-	995	810	-	-
		l/s	-	-	-	-	276	225	-	-
		CFM	-	-	-	-	586	477	-	-
	Low	m^3/h	-	-	805	685	-	-	-	-
		l/s	-	-	224	190	-	-	-	-
		CFM	-	-	474	403	-	-	-	-
	Quiet	m^3/h	645	550	-	-	-	-	-	-
		l/s	181	153	-	-	-	-	-	-
		CFM	383	324	-	-	-	-	-	-

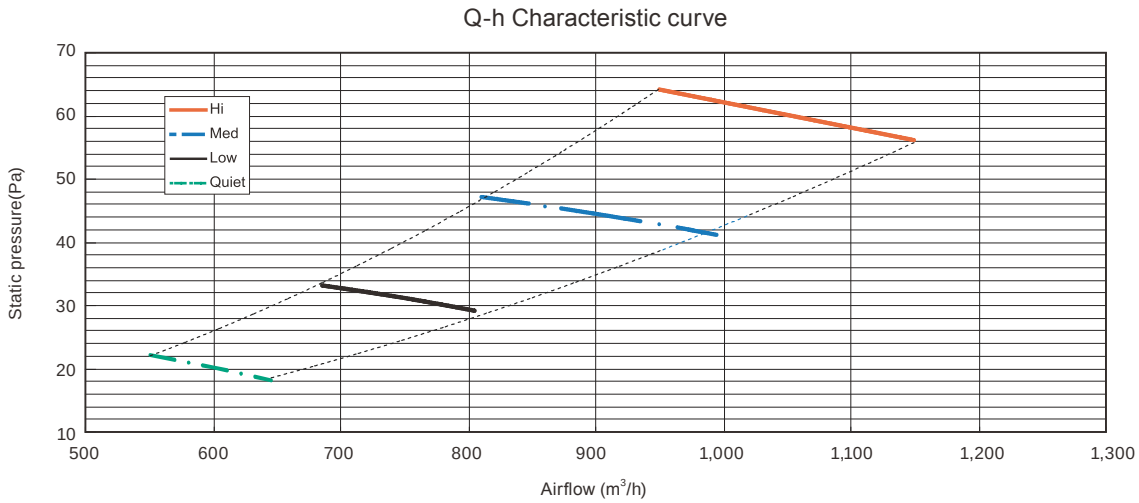

● Cooling

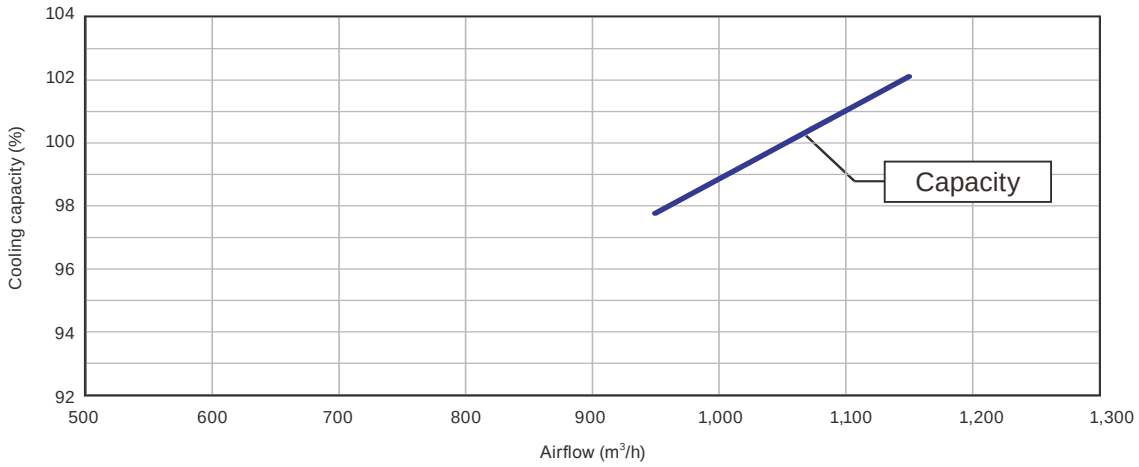

DUCT TYPE
ARGA18-25FMTA

■ MODEL: ARGA25FMTA

			Static pressure (Pa)							
			20	23	30	35	40	47	55	65
FAN SPEED	Hi	m^3/h	-	-	-	-	-	-	1200	1000
		l/s	-	-	-	-	-	-	333	278
		CFM	-	-	-	-	-	-	706	589
	Med	m^3/h	-	-	-	-	1000	815	-	-
		l/s	-	-	-	-	278	226	-	-
		CFM	-	-	-	-	589	480	-	-
	Low	m^3/h	-	-	830	680	-	-	-	-
		l/s	-	-	231	189	-	-	-	-
		CFM	-	-	489	400	-	-	-	-
	Quiet	m^3/h	650	540	-	-	-	-	-	-
		l/s	181	150	-	-	-	-	-	-
		CFM	383	318	-	-	-	-	-	-

Q-h Characteristic curve

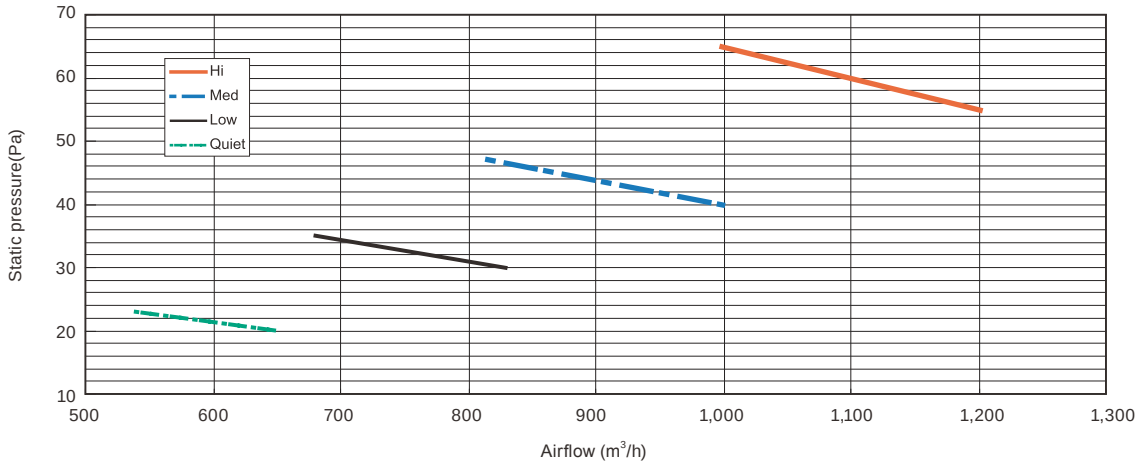

● Cooling

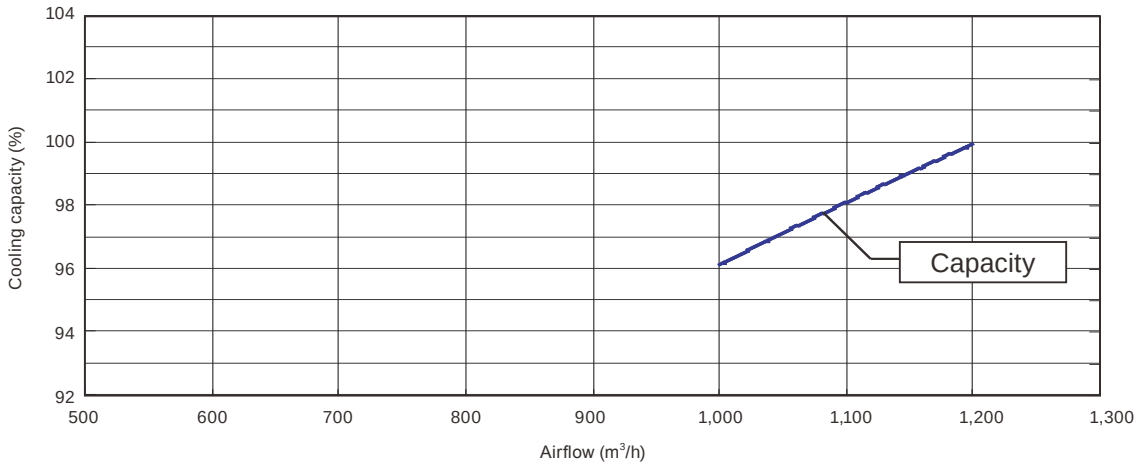

DUCT TYPE
ARGA18-25FMTA

7-3. STATIC PRESSURE MODE 2

■ MODEL: ARGA18FMTA

			Static pressure (Pa)							
			33	36	49	54	69	73	90	97
FAN SPEED	Hi	m^3/h	-	-	-	-	-	-	1135	950
		l/s	-	-	-	-	-	-	315	264
		CFM	-	-	-	-	-	-	668	559
	Med	m^3/h	-	-	-	-	990	825	-	-
		l/s	-	-	-	-	275	229	-	-
		CFM	-	-	-	-	583	486	-	-
	Low	m^3/h	-	-	820	710	-	-	-	-
		l/s	-	-	228	197	-	-	-	-
		CFM	-	-	483	418	-	-	-	-
	Quiet	m^3/h	685	585	-	-	-	-	-	-
		l/s	190	163	-	-	-	-	-	-
		CFM	403	344	-	-	-	-	-	-

Q-h Characteristic curve

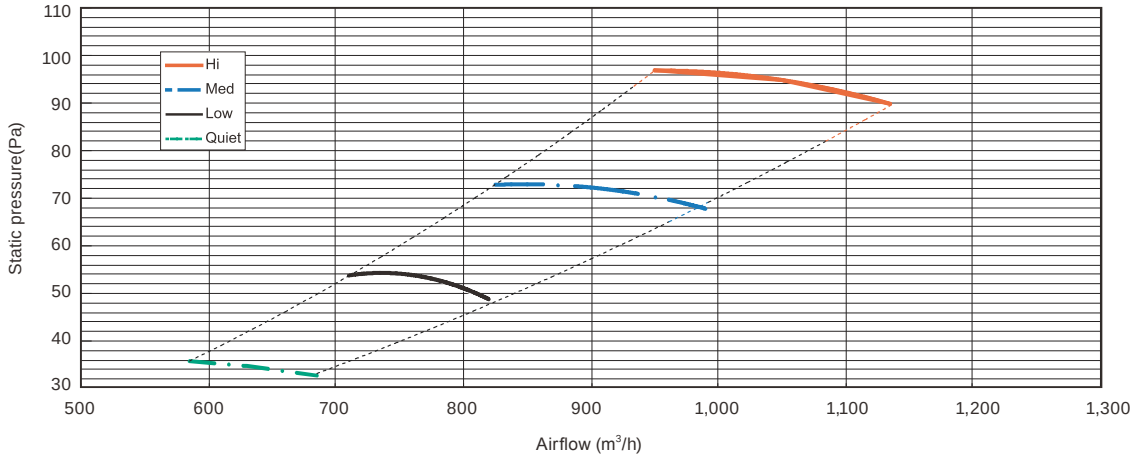

● Cooling

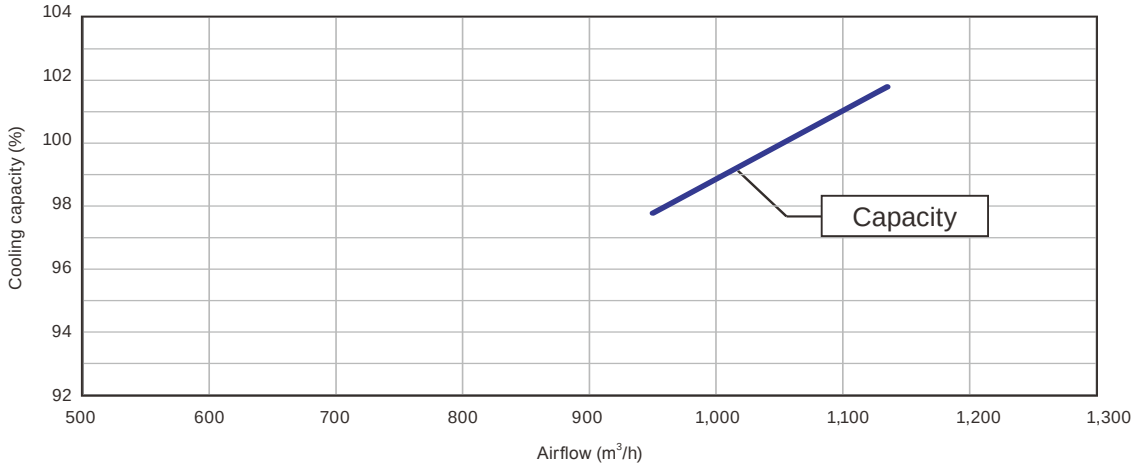

DUCT TYPE
ARGA18-25FMTA

■ MODEL: ARGA25FMTA

			Static pressure (Pa)							
			35	37	50	55	68	75	93	100
FAN SPEED	Hi	m^3/h	-	-	-	-	-	-	1160	930
		l/s	-	-	-	-	-	-	322	258
		CFM	-	-	-	-	-	-	683	547
	Med	m^3/h	-	-	-	-	1020	800	-	-
		l/s	-	-	-	-	283	222	-	-
		CFM	-	-	-	-	600	471	-	-
	Low	m^3/h	-	-	835	670	-	-	-	-
		l/s	-	-	232	186	-	-	-	-
		CFM	-	-	491	394	-	-	-	-
	Quiet	m^3/h	660	530	-	-	-	-	-	-
		l/s	183	147	-	-	-	-	-	-
		CFM	388	312	-	-	-	-	-	-

Q-h Characteristic curve

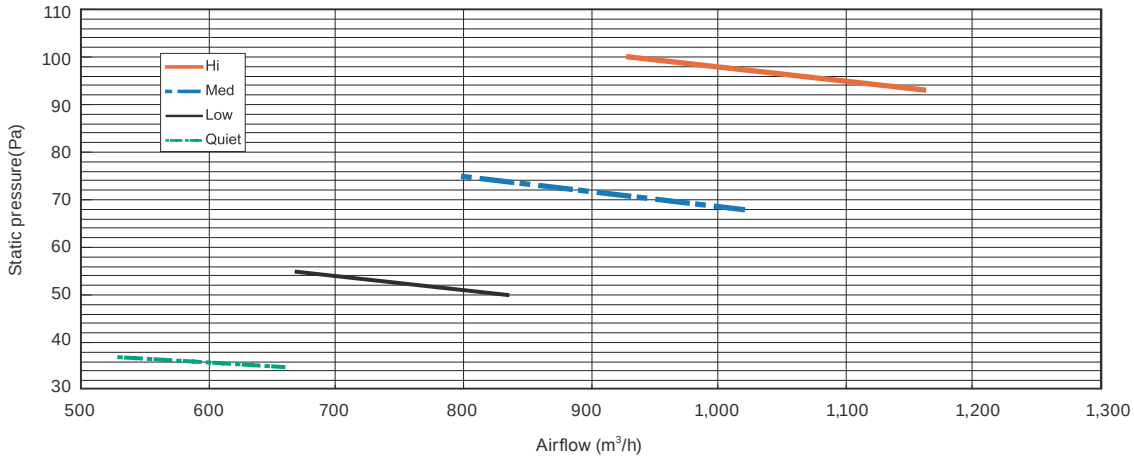

● Cooling

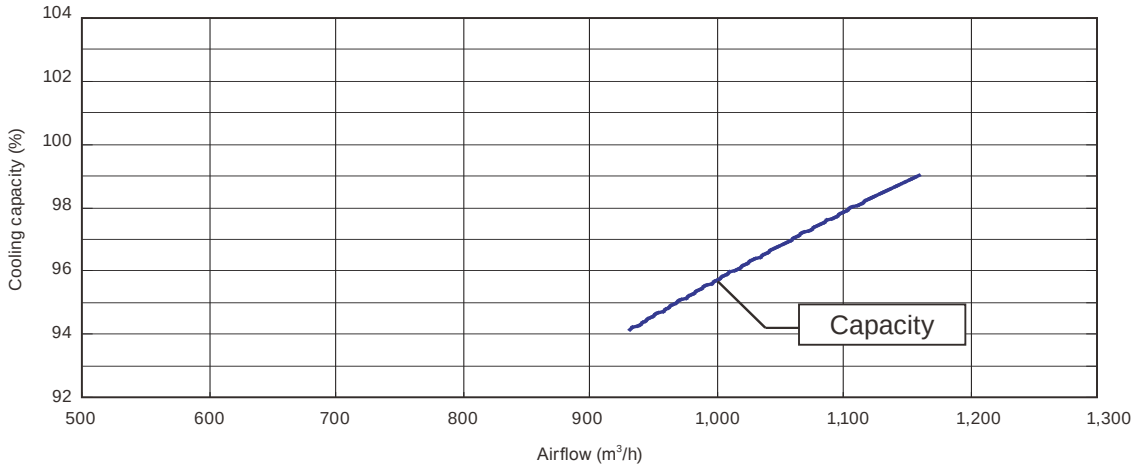

DUCT TYPE
ARGA18-25FMTA

7-4. STATIC PRESSURE MODE 3

■ MODEL: ARGA18FMTA

			Static pressure (Pa)							
			54	56	83	87	113	118	142	150
FAN SPEED	Hi	m^3/h	-	-	-	-	-	-	1140	1050
		l/s	-	-	-	-	-	-	317	292
		CFM	-	-	-	-	-	-	671	618
	Med	m^3/h	-	-	-	-	1030	920	-	-
		l/s	-	-	-	-	286	256	-	-
		CFM	-	-	-	-	606	542	-	-
	Low	m^3/h	-	-	880	790	-	-	-	-
		l/s	-	-	244	219	-	-	-	-
		CFM	-	-	518	465	-	-	-	-
	Quiet	m^3/h	710	650	-	-	-	-	-	-
		l/s	197	181	-	-	-	-	-	-
		CFM	418	383	-	-	-	-	-	-

Q-h Characteristic curve

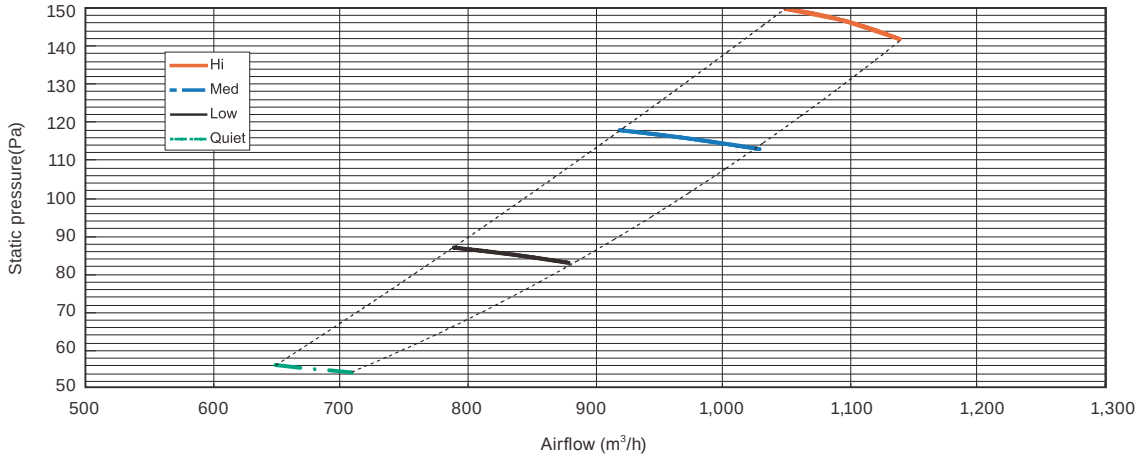

● Cooling

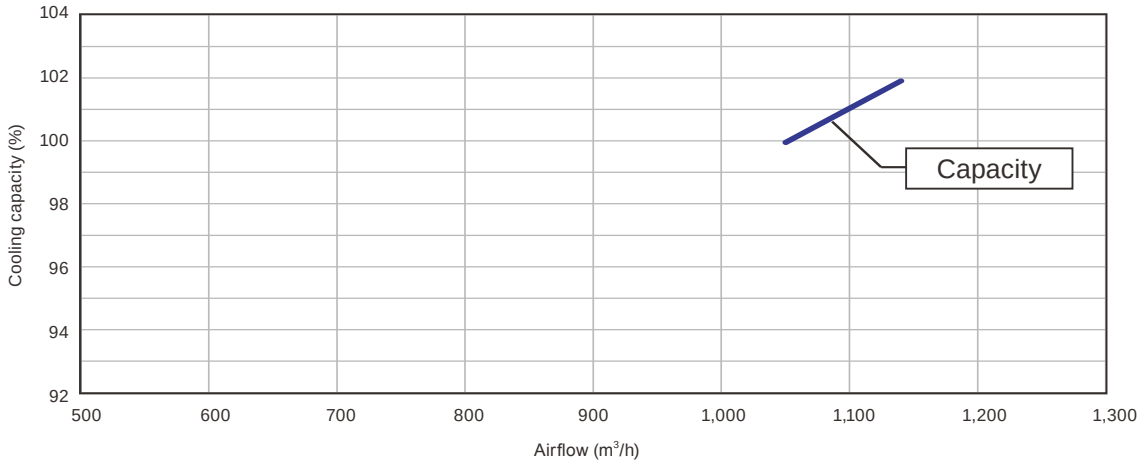

DUCT TYPE
ARGA18-25FMTA

■ MODEL: ARGA25FMTA

			Static pressure (Pa)							
			55	58	85	90	115	122	142	150
FAN SPEED	Hi	m^3/h	-	-	-	-	-	-	1100	880
		l/s	-	-	-	-	-	-	306	244
		CFM	-	-	-	-	-	-	647	518
	Med	m^3/h	-	-	-	-	1000	810	-	-
		l/s	-	-	-	-	278	225	-	-
		CFM	-	-	-	-	589	477	-	-
	Low	m^3/h	-	-	840	680	-	-	-	-
		l/s	-	-	233	189	-	-	-	-
		CFM	-	-	494	400	-	-	-	-
	Quiet	m^3/h	660	525	-	-	-	-	-	-
		l/s	183	146	-	-	-	-	-	-
		CFM	388	309	-	-	-	-	-	-

Q-h Characteristic curve

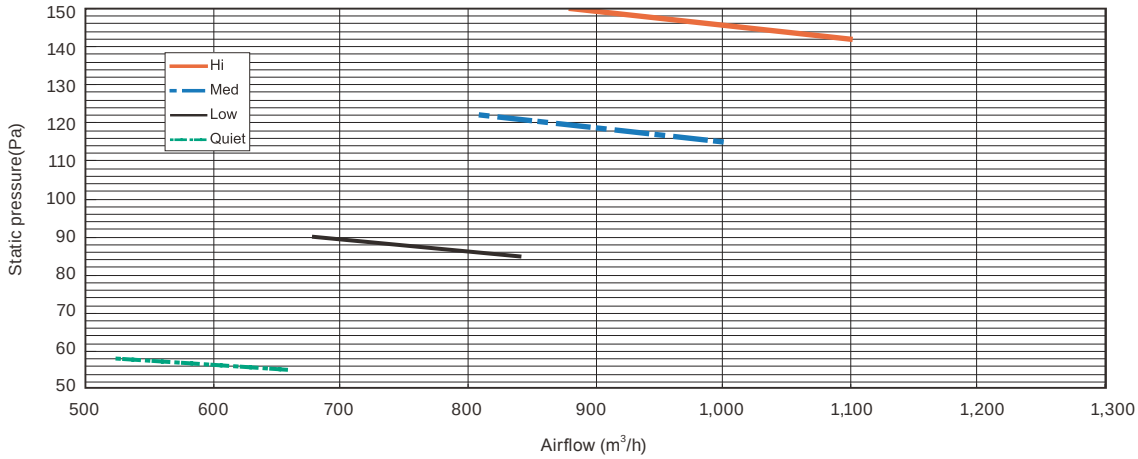

● Cooling

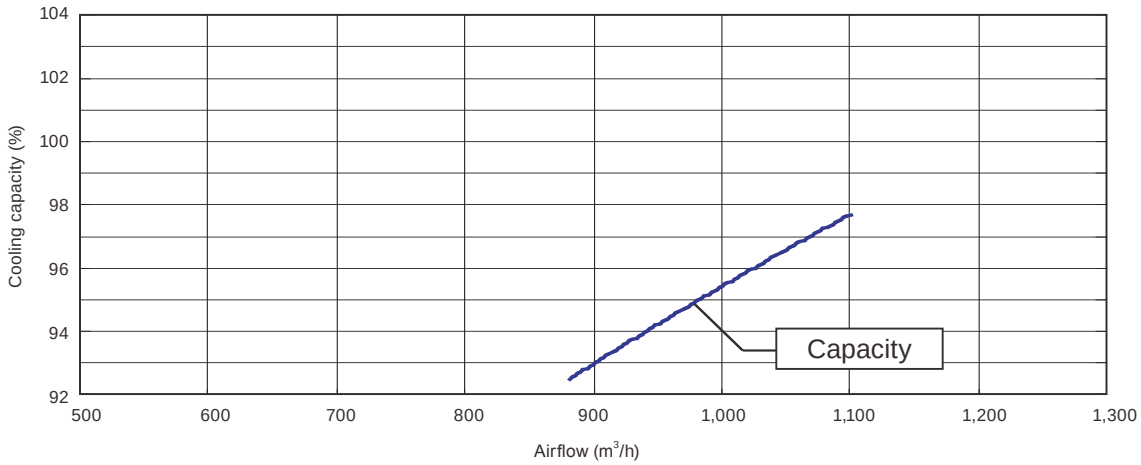

8. OPERATION NOISE (SOUND PRESSURE)

8-1. NOISE LEVEL CURVE

Conditions:
Static pressure: 35 Pa
Static pressure mode: NORMAL

■ MODEL: ARGA18FMTA

● COOLING

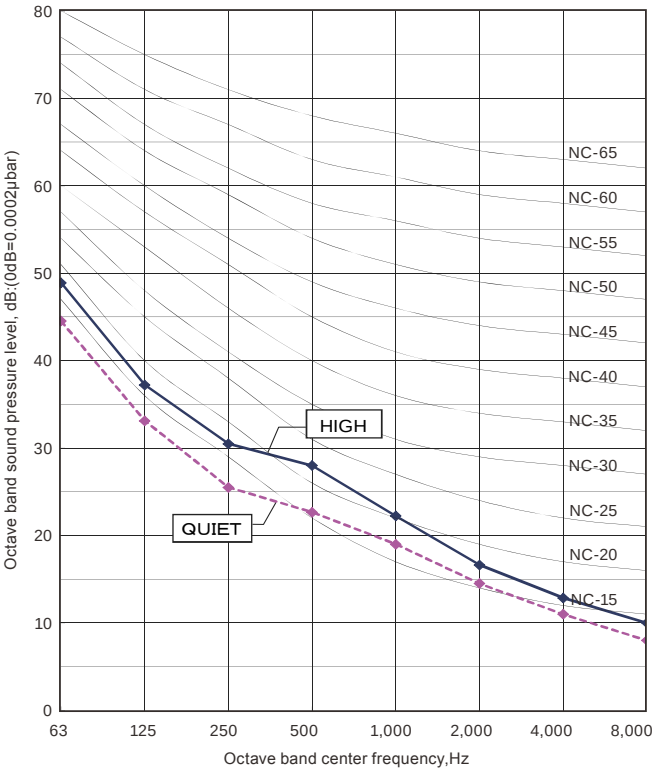

■ MODEL: ARGA25FMTA

● COOLING

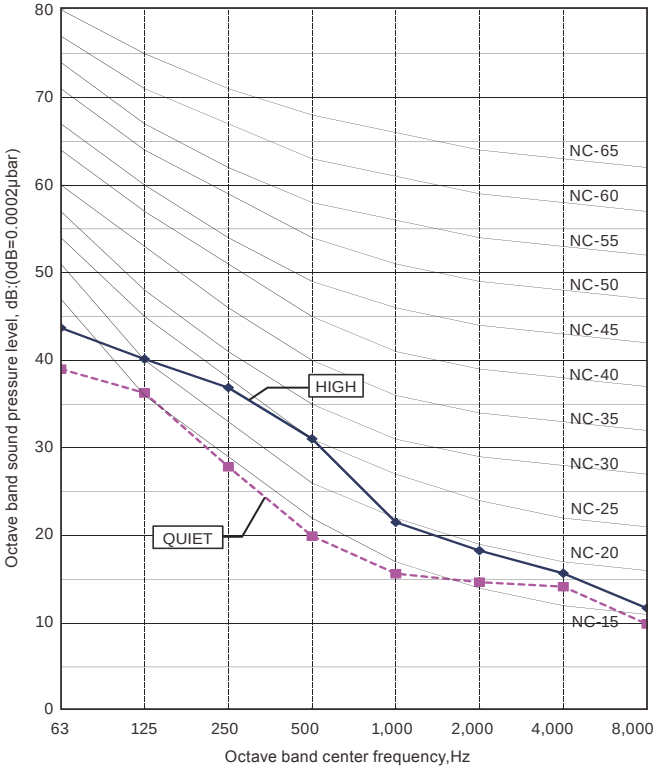

8-2. SOUND LEVEL CHECK POINT

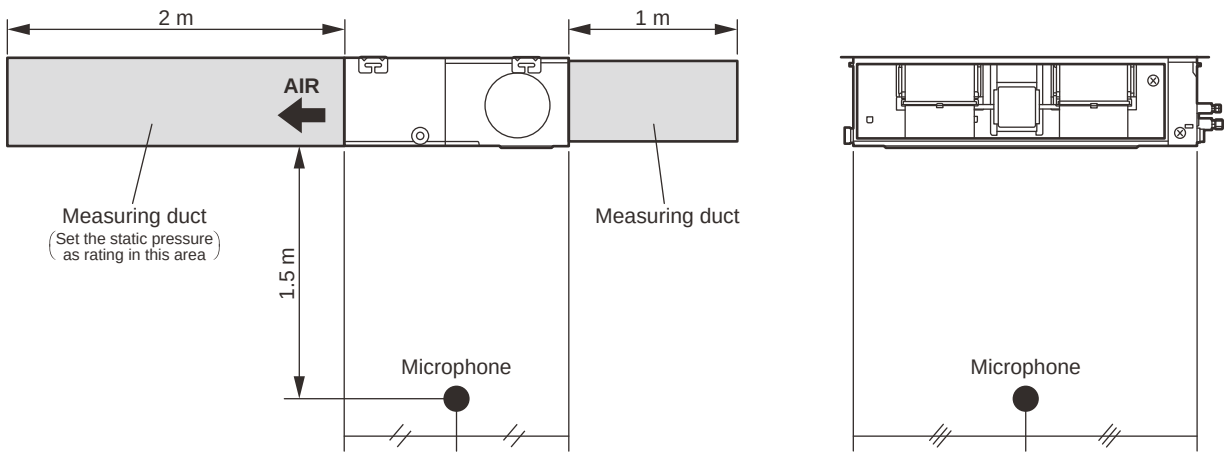

DUCT TYPE
ARGA18-25FMTA

DUCT TYPE
ARGA18-25FMTA

9. SAFETY DEVICES

	Protection form	Models
		ARGA18FMTA ARGA25FMTA
Circuit protection	Current fuse (PC board)	250 V 3.15 A
Fan motor protection	Thermal protection	OFF: 135 ± 15 °C ON: 115 ± 15 °C

10. EXTERNAL INPUT & OUTPUT

Connector	INPUT	OUTPUT	REMARKS
CN102	Control input	—	See external input/output settings for details.
CN103	—	Operation status output	
CN6	—	Fresh air control output	

10-1. EXTERNAL INPUT

■ CONTROL INPUT (Operation/Stop or Forced stop)

The air conditioner can be remotely operated by means of the following on-site work.

"Operation/Stop" mode or "Forced stop" mode can be selected with function setting of indoor unit.

Unit operation is started at the following contents by adding the contact input of a commercial ON/OFF switch to a connector on the external control PC board and turning it ON.

Unit operation	Initial setting after power is ON	Starting mode other than initial setting
Operation mode	Auto changeover	Mode at previous operation
Set temperature	24°C	Temperature at previous operation
Airflow mode	AUTO	Mode at previous operation
Air direction (swing)	Standard air direction (swing OFF)	Air direction at previous operation

● Circuit diagram example

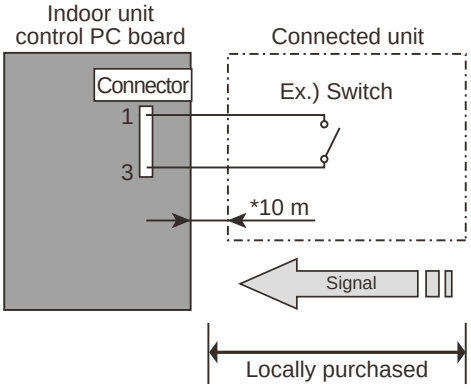

*: Make the distance from the PC board to the connected unit within 10 m.
Contact capacity: DC 24 V or more, 10 mA or more.
Please use non-polar relays and switches.

● When function setting is in "Operation/Stop" mode

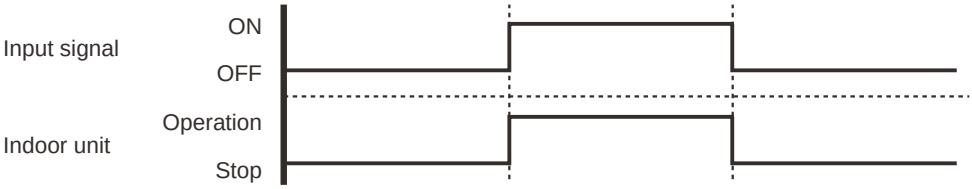

● When function setting is in "Forced stop" mode

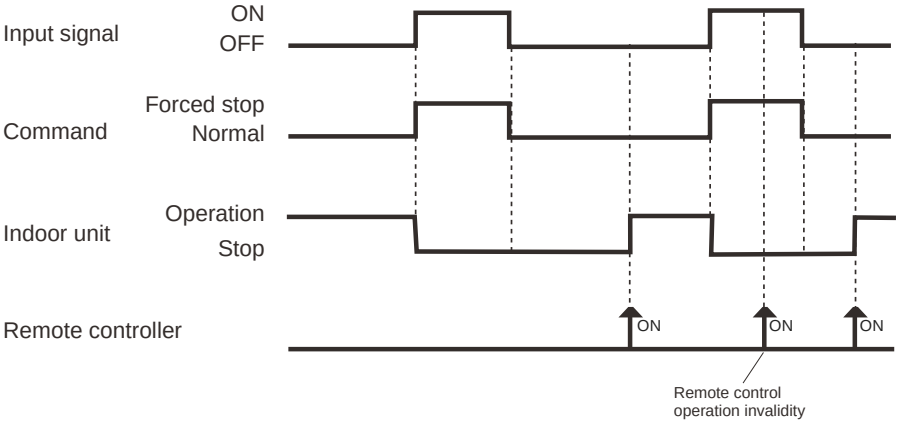

● Parts (Optional)

Model name
UTD-ECS5A

Wire (External input)

DUCT TYPE
ARGA18-25FMTA

10-2. EXTERNAL OUTPUT

■ OPERATION STATUS OUTPUT

An air conditioner operation status signal can be output.

● Circuit diagram example

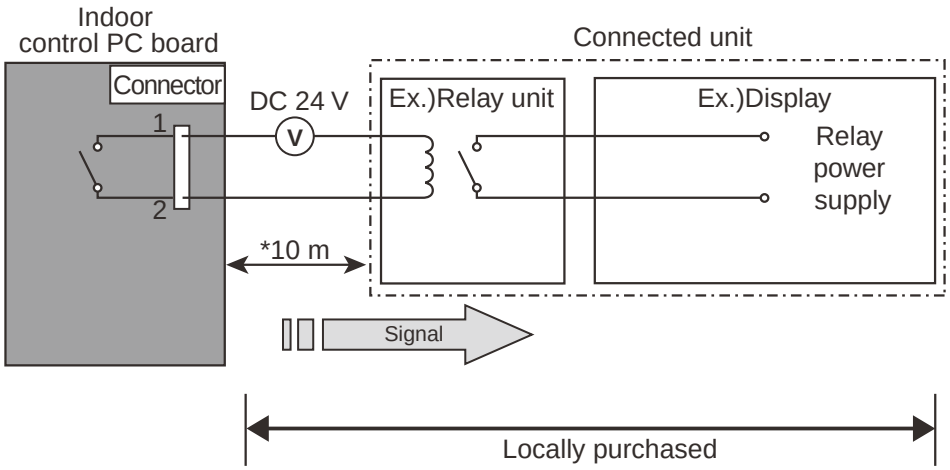

*: Make the distance from the PC board to the connected unit within 10 m.
Relay spec.: Max. DC 24 V, 10 mA to less than 500 mA.

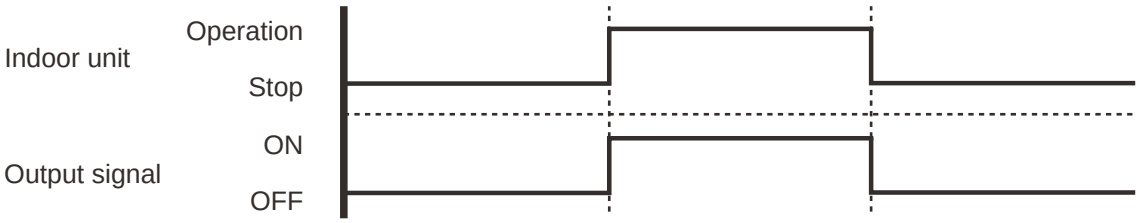

● Parts (Optional)

Model name
UTD-ECS5A

Wire (External output)

DUCT TYPE
ARGA18-25FMTA

■ FRESH AIR CONTROL OUTPUT

A signal linked to air conditioner indoor fan ON can be output.

* However, signal becomes OFF during cold air prevention control operation.

● Circuit diagram example

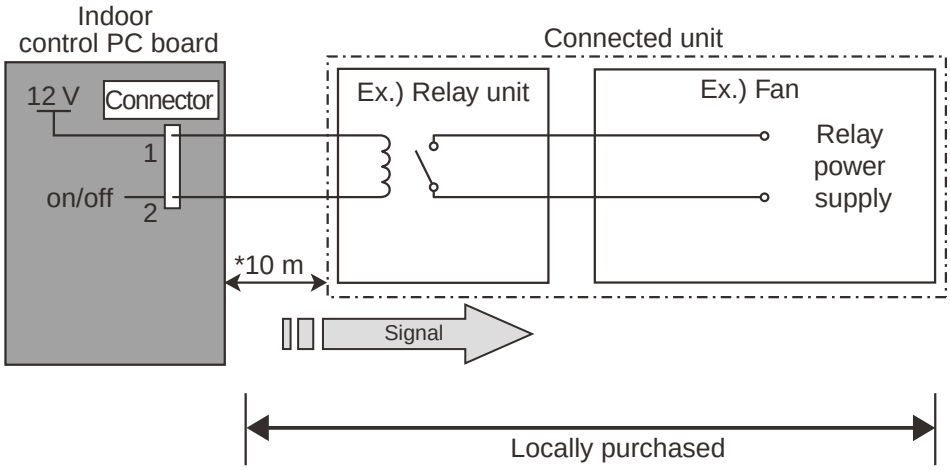

*: Make the distance from the PC board to the connected unit within 10 m.
Relay spec.: Rated DC 12 V, 50 mA or less.

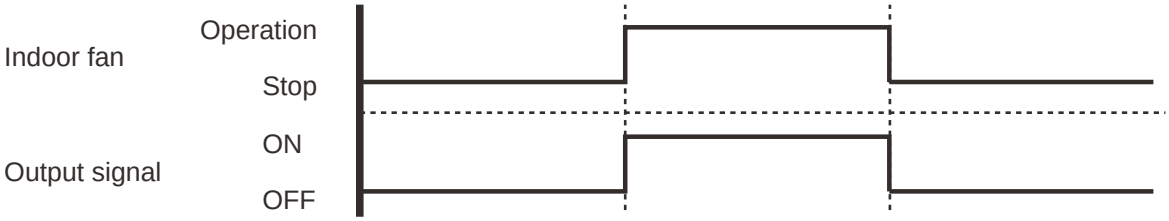

● Parts (Optional)

Model name
UTD-ECS5A

Wire (Fresh air output)

11. FUNCTION SETTINGS

11-1. INDOOR UNIT

INDOOR UNIT		
DIP SW	1	Remote controller address setting
	2	
	3	
	4	
Jumper Wire	JM1	Setting change prohibited
	JM2	
	JM3	

■ SWITCH POSITION

MAIN PCB

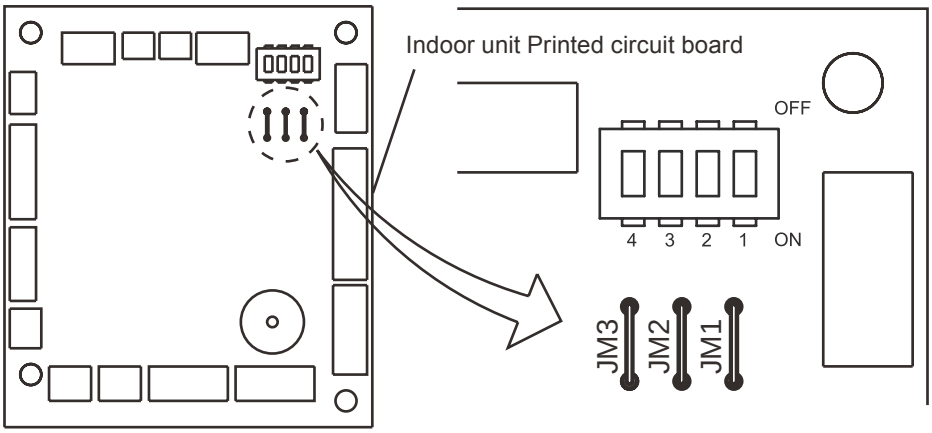

■ DIP-SW SETTING

● Unit number setting

A number of indoor units can be operated at the same time using a wired remote controller.
Set the unit number of each indoor unit using the DIP switches on the indoor unit circuit board.
(See the following table.)
The DIP switches are normally set to make the unit number 00.

(◆. . .Factory setting)

Unit number	DIP switch No.			
	1	2	3	4
◆ 00	OFF	OFF	OFF	OFF
01	ON	OFF	OFF	OFF
02	OFF	ON	OFF	OFF
03	ON	ON	OFF	OFF
04	OFF	OFF	ON	OFF
05	ON	OFF	ON	OFF
06	OFF	ON	ON	OFF
07	ON	ON	ON	OFF
08	OFF	OFF	OFF	ON
09	ON	OFF	OFF	ON
10	OFF	ON	OFF	ON
11	ON	ON	OFF	ON
12	OFF	OFF	ON	ON
13	ON	OFF	ON	ON
14	OFF	ON	ON	ON
15	ON	ON	ON	ON

DUCT TYPE
ARGA18-25FMTA

11-2. INDOOR UNIT (Setting by remote controller)

- The function settings of the control of the indoor unit can be changed by this procedure according to the installation conditions. Incorrect settings can cause the indoor unit to malfunction.
- After the power is turned on, perform the Function Setting according to the installation conditions using the remote controller.
- The settings may be selected between the following two: Function Number or Setting Number.
- Settings will not be changed if disable numbers or setting values are selected.

■ PREPARATION

- Turn on the power.

* Before turning on the power of the indoor units, make sure the piping air-tight test and vacuuming have been conducted.

* Also check again to make sure no wiring mistakes were made before turning on the power.

■ FUNCTION SETTING METHOD (for Wired remote controller)

● Setting method

(1) Press the SET TEMP. buttons (∨) (∧) and FAN button simultaneously for more than 5 seconds to enter the function setting mode.

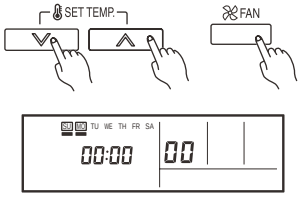

(2) Press the SET BACK button to select the indoor unit number.

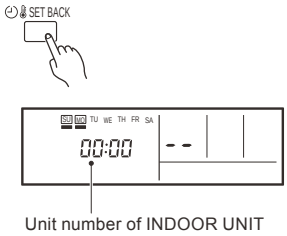

(3) Press the Set time buttons to select the function number.

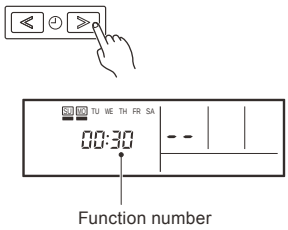

(4) Press the SET TEMP. buttons (∨) (∧) to select the setting value. The indicator flashes during setting value selection.

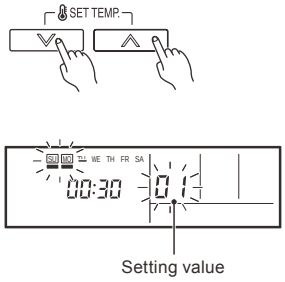

DUCT TYPE
ARGA18-25FMTA

(5) Press the TIMER SET button to confirm the setting. Press the TIMER SET button for a few seconds until the setting value stops flashing. If the setting value indicator changes or if “- -” is displayed when the flashing stops, the setting value has not been set correctly. (A disable setting value may have been selected for the indoor unit.)

(6) Repeat steps 2 to 5 to perform additional settings. Press the SET TEMP. buttons (∨) (∧) and FAN button simultaneously again for more than 5 seconds to cancel the function setting mode. In addition, the function setting mode will be automatically canceled after 1 minute if no operation is performed.

(7) After completing the FUNCTION SETTING, be sure to turn off the power and turn it on again.

⚠CAUTION
• After turning off the power, wait 30 seconds or more before turning on it again. The Function Setting will not become active unless the power is turned off then on again.

■ CONTENTS OF FUNCTION SETTING

- Follow the instructions in the Local Setup Procedure, which is supplied with the remote control, in accordance with the installed condition.
  After the power is turned on, perform the Function Setting on the remote control.
- The settings may be selected between the following two: Function Number or Setting Value.
- Settings will not be changed if inenable numbers or setting values are selected.

1)	Filter sign
2)	Static pressure
3)	Room temperature sensor control for cooling
4)	Auto restart
5)	Room temperature sensor switching
6)	External input control
7)	Room temperature sensor switching (Aux.)

1) Filter sign

Select appropriate intervals for displaying the filter sign on the indoor unit according to the estimated amount of dust in the air of the room.
If the indication is not required, select "No indication" (03).

(◆. . .Factory setting)

Function Number	Setting Value	Setting Description	
11	00	Standard (2500 hours)	
	01	Long interval (4400 hours)	
	02	Short interval (1250 hours)	
	03	No indication	◆

2) Static pressure

Select the appropriate static pressure according to the installation conditions.

(◆. . .Factory setting)

Function Number	Setting Value	Setting Description	
21	00	Normal	◆
	01	High static pressure 1	
	02	High static pressure 2	
	03	High static pressure 3	

Refer to "7. FAN PERFORMANCE AND CAPACITY".

3) Room temperature sensor control for cooling

Depending on the installed environment, correction of the room temperature sensor may be required.
Select the appropriate control setting according to the installed environment.

(◆. . .Factory setting)

Function Number	Setting Value	Setting Description	
30	00	Standard	◆
	01	Lower control	
	02	Slightly higher control	
	03	Higher control	

DUCT TYPE
ARGA18-25FMTA

4) Auto restart

Enable or disable automatic restart after a power interruption.

(◆. . .Factory setting)

Function Number	Setting Value	Setting Description	
40	00	Enable	◆
	01	Disable	

* Auto restart is an emergency function such as for power outage etc.
Do not attempt to use this function in normal operation.
Be sure to operate the unit by remote controller or external device.

5) Room temperature sensor switching

(Only for wired remote controller)

When using the Wired remote controller temperature sensor, change the setting to "Both" (01).

(◆. . .Factory setting)

Function Number	Setting Value	Setting Description	
42	00	Indoor unit	◆
	01	Both	

00: Sensor on the indoor unit is active.

01: Sensors on both indoor unit and wired remote controller are active.

*Remote controller sensor must be turned on by using the remote controller.

6) External input control

"Operation/Stop" mode or "Forced stop" mode can be selected.

(◆. . .Factory setting)

Function Number	Setting Value	Setting Description	
46	00	Operation/Stop mode	◆
	01	(Setting prohibited)	
	02	Forced stop mode	

7) Room temperature sensor switching (Aux.)

To use the temperature sensor on the wired remote controller only, change the setting to "Wired remote controller" (01). This function will only work if the function setting 42 is set at "Both" (01).

(◆. . .Factory setting)

Function Number	Setting Value	Setting Description	
48	00	Both	◆
	01	Wired remote controller	

DUCT TYPE
ARGA18-25FMTA

11-3. WIRED REMOTE CONTROLLER

DIP Switch 1	SW1	Setting change prohibited
	SW2	Setting change prohibited
	SW3	Setting change prohibited
	SW4	Setting change prohibited
	SW5	Setting change prohibited
	SW6	Memory backup setting

* Do not use DIP Switch 2

■ SWITCH POSITION

● Wired remote controller

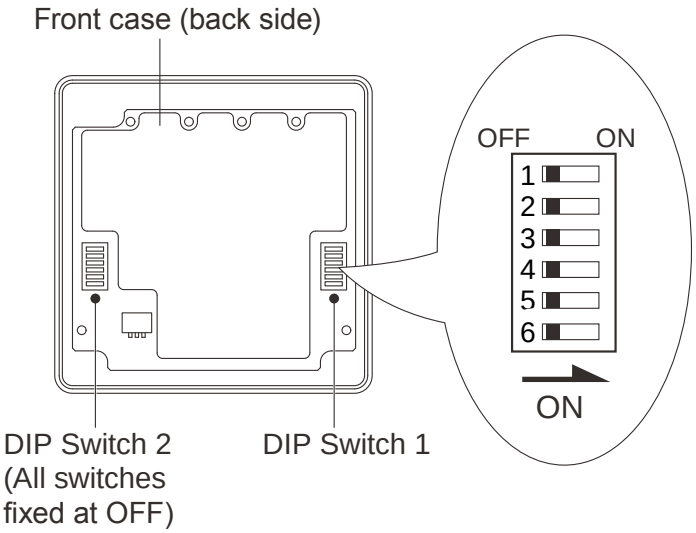

DUCT TYPE
ARGA18-25FMTA

■ DIP SWITCH 1 SETTING

● SW6 setting

● Memory backup setting

Set to ON to use batteries for the memory backup.

If batteries are not used, all of settings stored in memory will be deleted if there is a power failure.

(◆...Factory setting)

	SW6	Memory backup
◆	OFF	Disable
	ON	Enable

12. OPTIONAL PARTS

Exterior	Parts name	Model No.	Summary
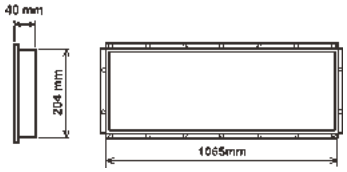	Square flange	UTD-SF045T	Both the **Square flange** and the **Round flange** can be selected. **Round flange** is also used when the fresh air duct is installed.
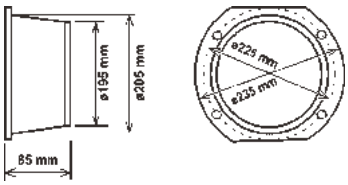	Round flange	UTD-RF204	
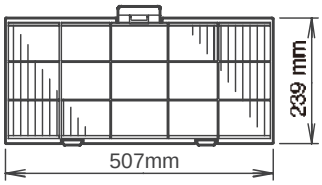	Long-life filter	UTD-LF25NA	**Long-life filter** can be mounted to the indoor unit.
	Remote sensor	UTY-XSZX	New amenity space can be offered by installing the **Remote sensor** in the remote controller.
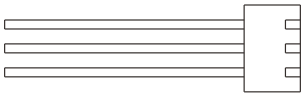	External control set	UTD-ECS5A	Use to connect with various peripheral devices and air conditioner PC board.

2. OUTDOOR UNIT

SINGLE TYPE:

AOGA18FBTAH
AOGA25FBTAH

CONTENTS

2. OUTDOOR UNIT

OUTDOOR UNIT
AOGA18-25FBTAH

1. SPECIFICATIONS

Type				COOLING ONLY	
Model name				AOGA18FBTAH	AOGA25FBTAH
Power source				220 / 240 V ~ 50 Hz	
Available voltage range				198 to 264 V	
Starting current			A	42	55
Fan	Airflow rate		m^3/h	3,200	3,300
	Type × Q'ty			Propeller × 1	
	Motor output		W	75	59
Sound pressure level *		Cooling	dB(A)	54	54
Heat exchanger type		Dimensions (H × W × D)	mm	630 x 901 x 36.4	798 × 900 × 36.4
		Fin pitch		1.45	1.30
		Rows x Stages		2 × 30	2 × 38
		Pipe type		Copper	
		Fin type (Surface treatment)		Aluminium (Blue fin)	
Compressor	Type × Q'ty			Rotary × 1	
	Motor output		W	1,330	1,670
Refrigerant		Type		R410A	
		Charge	g	1,500	1,800
Refrigerant oil		Type		RB75EA (POE)	
Enclosure		Material		Steel sheet	
		Colour		BEIGE Approximate colour of MUNSELL 10YR 7.5/1.0	
Dimensions (H × W × D)	Net		mm	650 × 830 × 320	830 × 900 × 330
	Gross			743 × 984 × 413	970 × 1050 × 445
Weight	Net		kg	50	63
	Gross			54	70
Connection pipe	Size	Liquid	mm	Ø 6.35 (Ø 1/4 in.)	
		Gas		Ø 15.88 (Ø 5/8 in.)	
	Method			Flare	
	Pre-charge length		m	7.5	
	Max. length			20	25
	Max. height difference			8	15
Operation range		Cooling	˚C	21 to 52	

NOTES:
Specifications are based on the following conditions.
Cooling: Indoor temperature of 27 °CDB / 19 °CWB.and outdoor temperature of 35 °CDB/24 °CWB.
Pipe length: 7.5 m, Height difference: 0 m.(Outdoor unit - Indoor unit)
The protective function may work when using it outside the operation range.
*: These are the measured values in the manufacturer's anechoic chamber.
Because of the surrounding sound environment, the sound levels measured in actual installation conditions might be higher than the specified values here.

OUTDOOR UNIT
AOGA18-25FBTAH

2. DIMENSIONS

■ MODEL: AOGA18FBTAH

(Unit : mm)

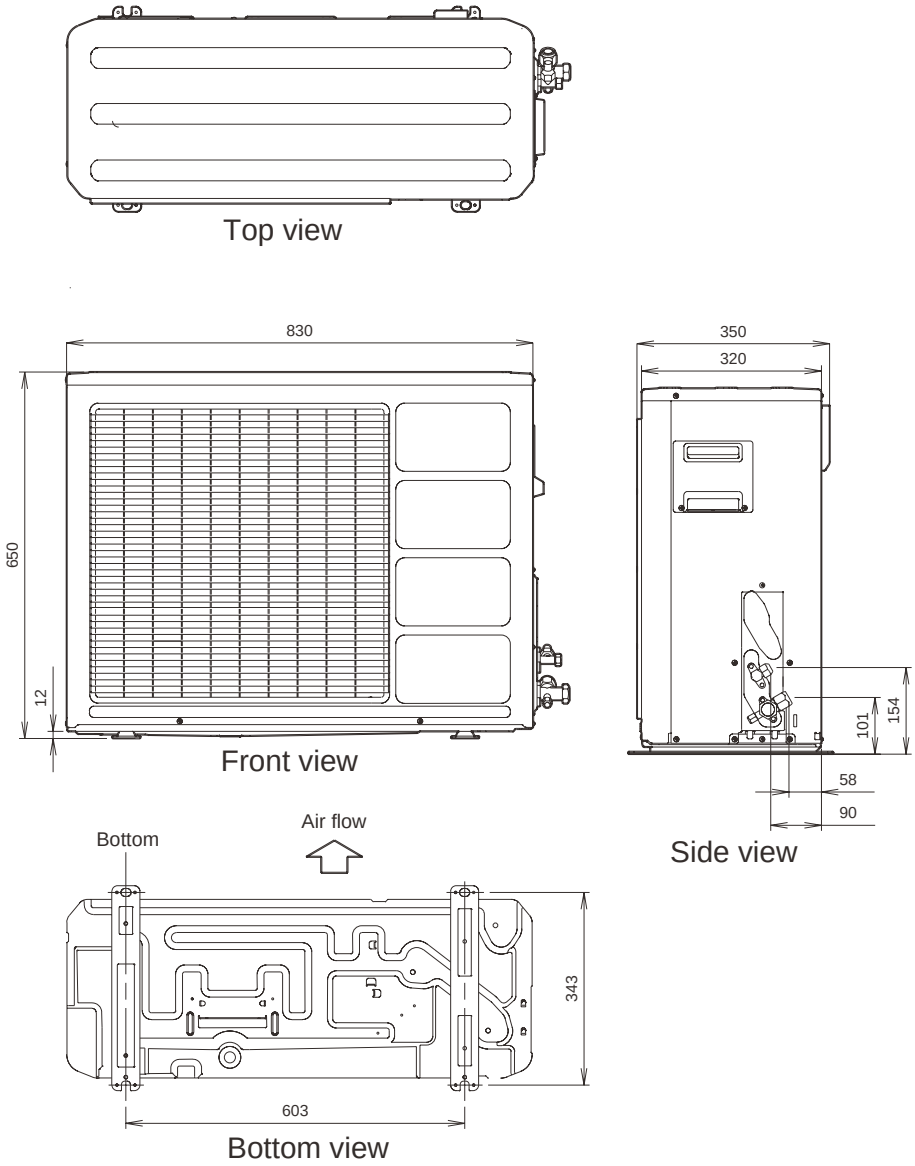

■ INSTALLATION PLACE

(Unit : mm)

When there are obstacles at the back and front sides.

When there are obstacles at the back, side(s), and top.

When there are obstacles at the back side with the installation of more than one unit.

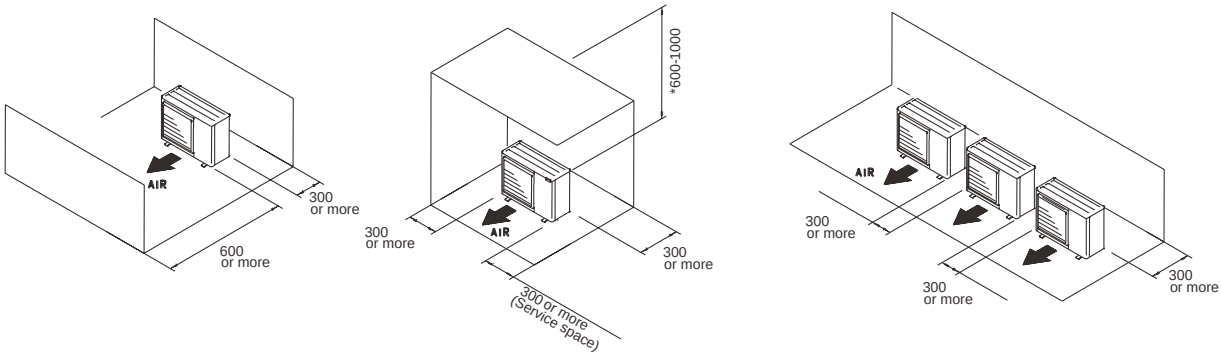

* If the space is larger than stated, the condition will be the same as those without any obstacles.

• Height above the floor level should be 50 mm or more.

■ MODEL: AOGA25FBTAH

(Unit : mm)

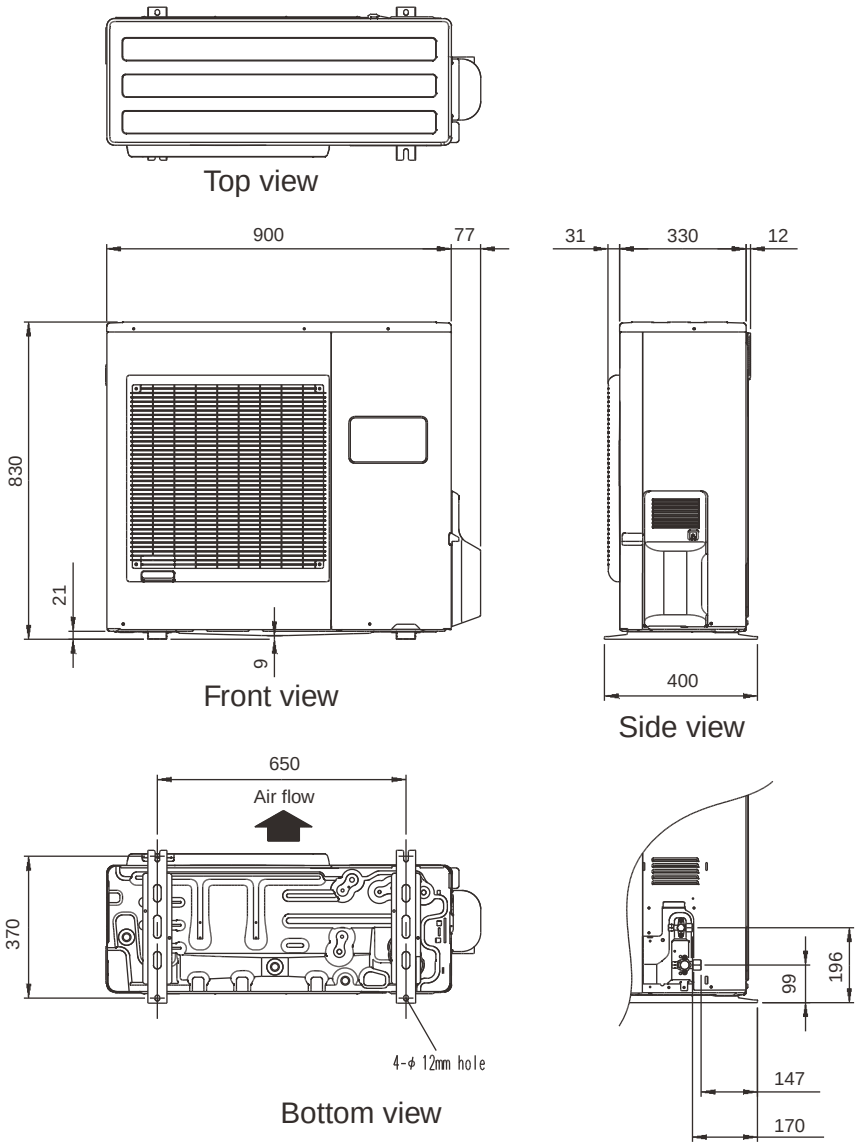

■ INSTALLATION PLACE

(Unit : mm)

When there are obstacles at the back and front sides.

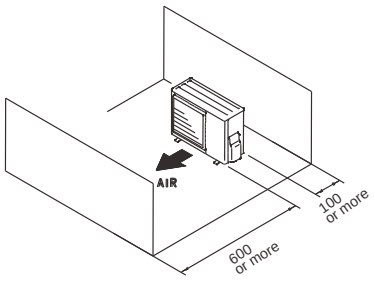

When there are obstacles at the back, side(s), and top.

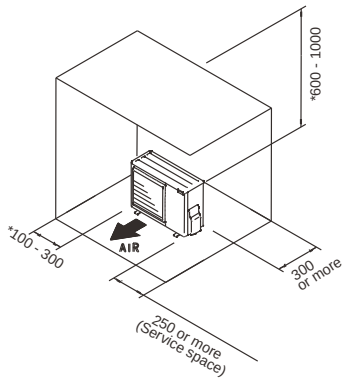

When there are obstacles at the back side with the installation of more than one unit.

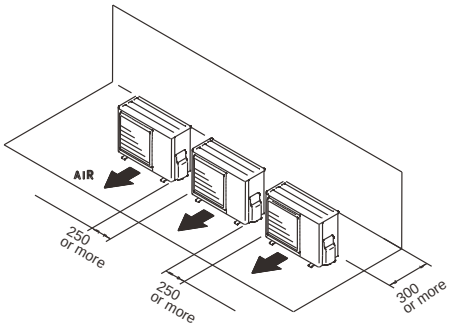

* If the space is larger than stated, the condition will be the same as those without any obstacles.

• Height above the floor level should be 50 mm or more.

3. REFRIGERANT CIRCUIT

■ MODEL: AOGA18FBTAH

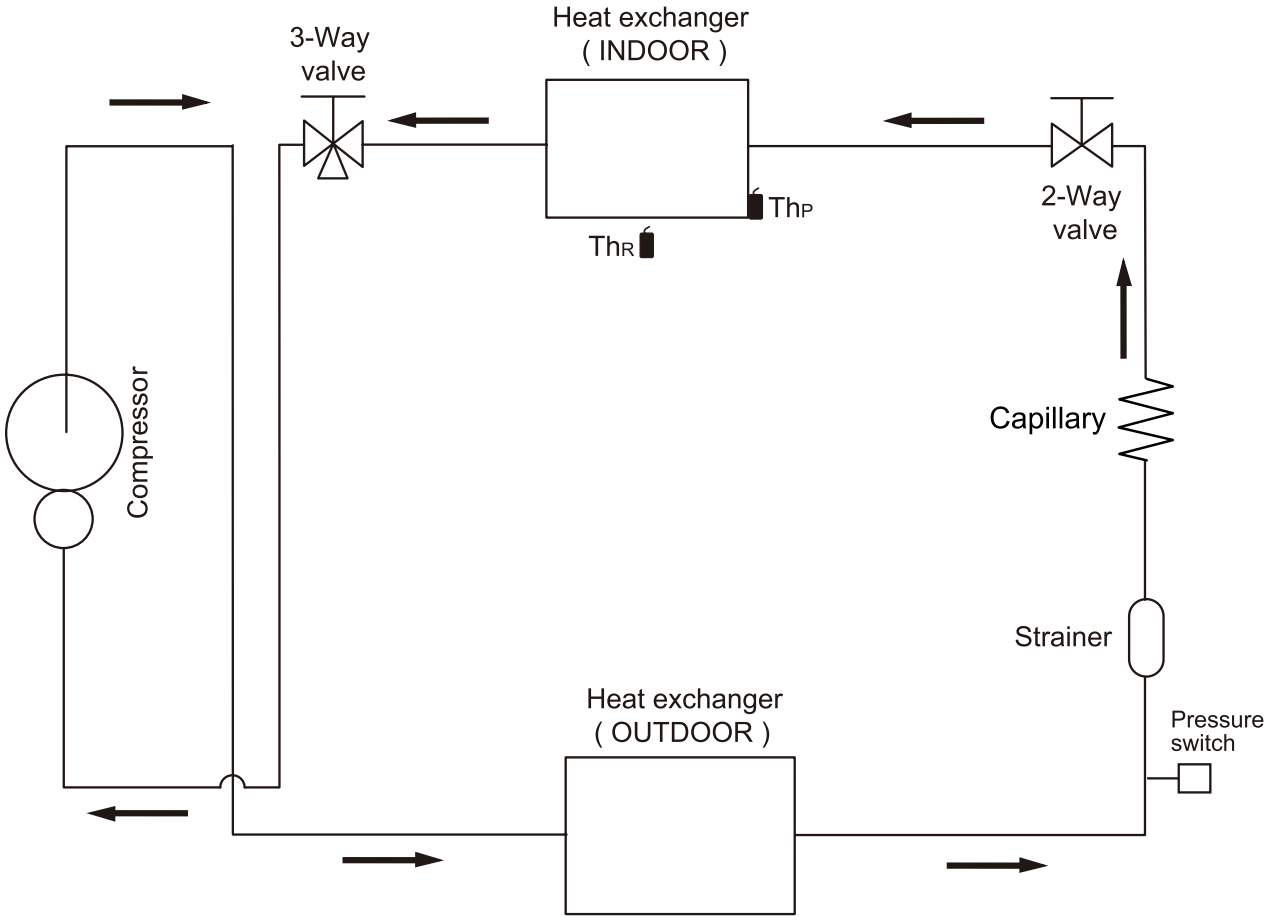

Cooling

ThR : Thermistor (Room Temp.)

ThP : Thermistor (Pipe Temp.)

Refrigerant pipe diameter
Liquid : 1/4" (6.35 mm)
Gas : 5/8" (15.88 mm)

OUTDOOR UNIT
AOGA18-25FBTAH

■ MODEL: AOGA25FBTAH

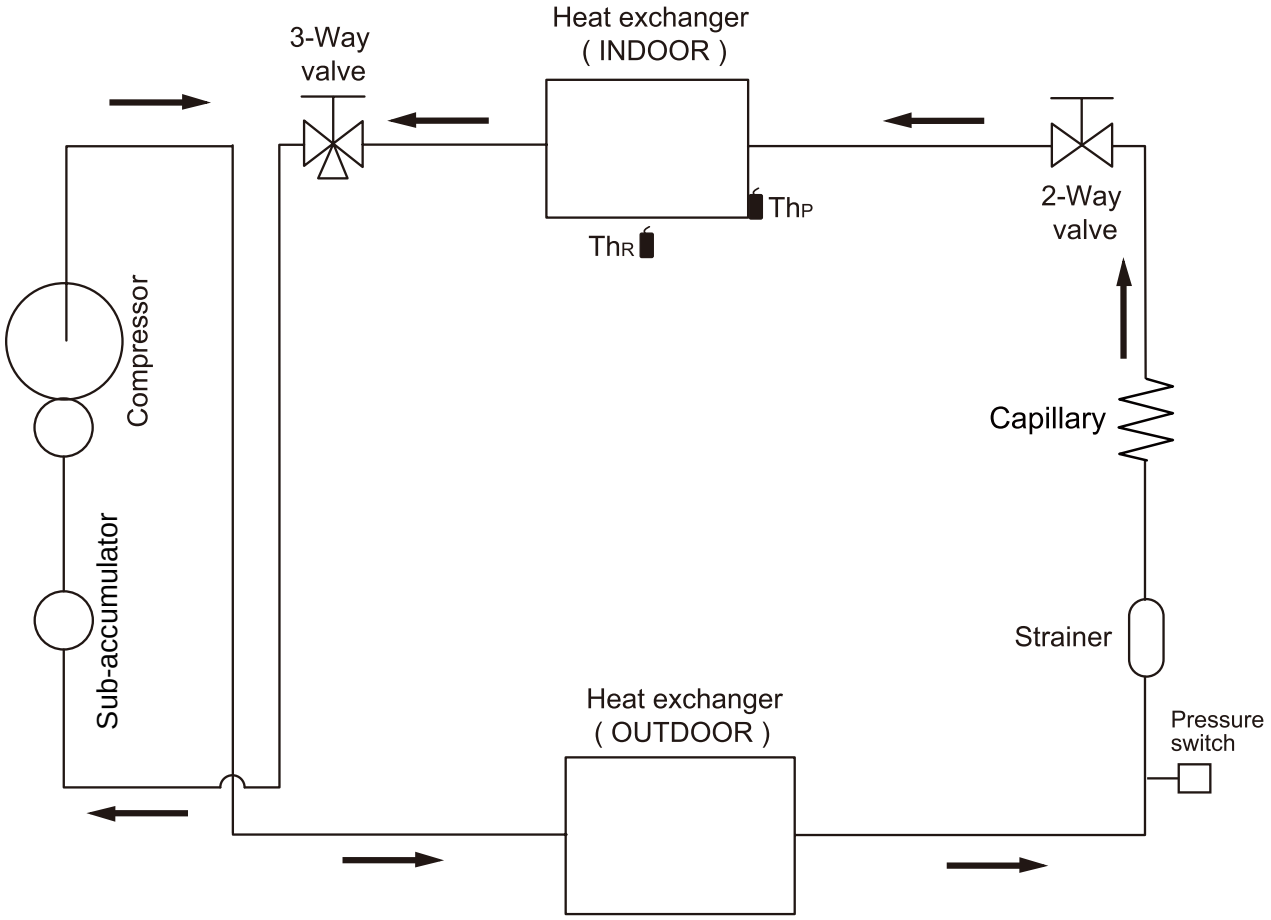

ThR : Thermistor (Room Temp.)

ThP : Thermistor (Pipe Temp.)

Refrigerant pipe diameter
Liquid : 1/4" (6.35 mm)
Gas : 5/8" (15.88 mm)

OUTDOOR UNIT
AOGA18-25FBTAH

4. WIRING DIAGRAMS

■ MODEL: AOSA18FBTAH

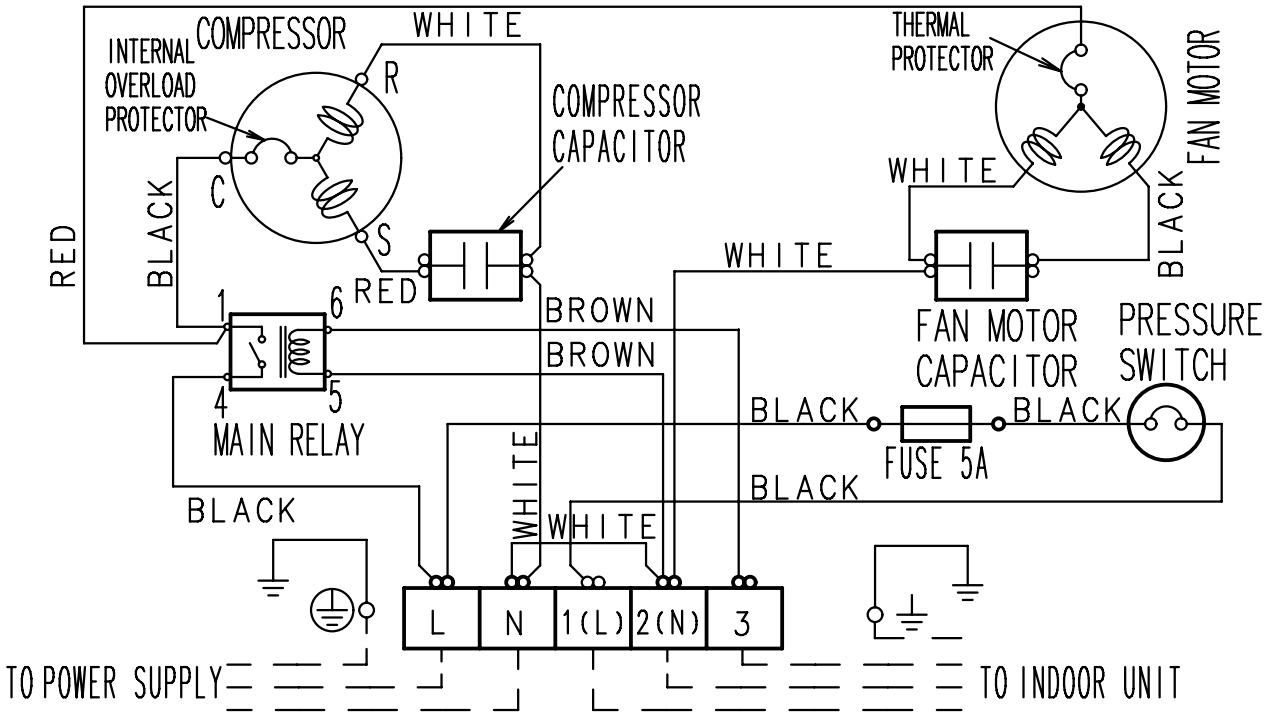

OUTDOOR UNIT
AOGA18-25FBTAH

■ MODEL: AOGA25FBTAH

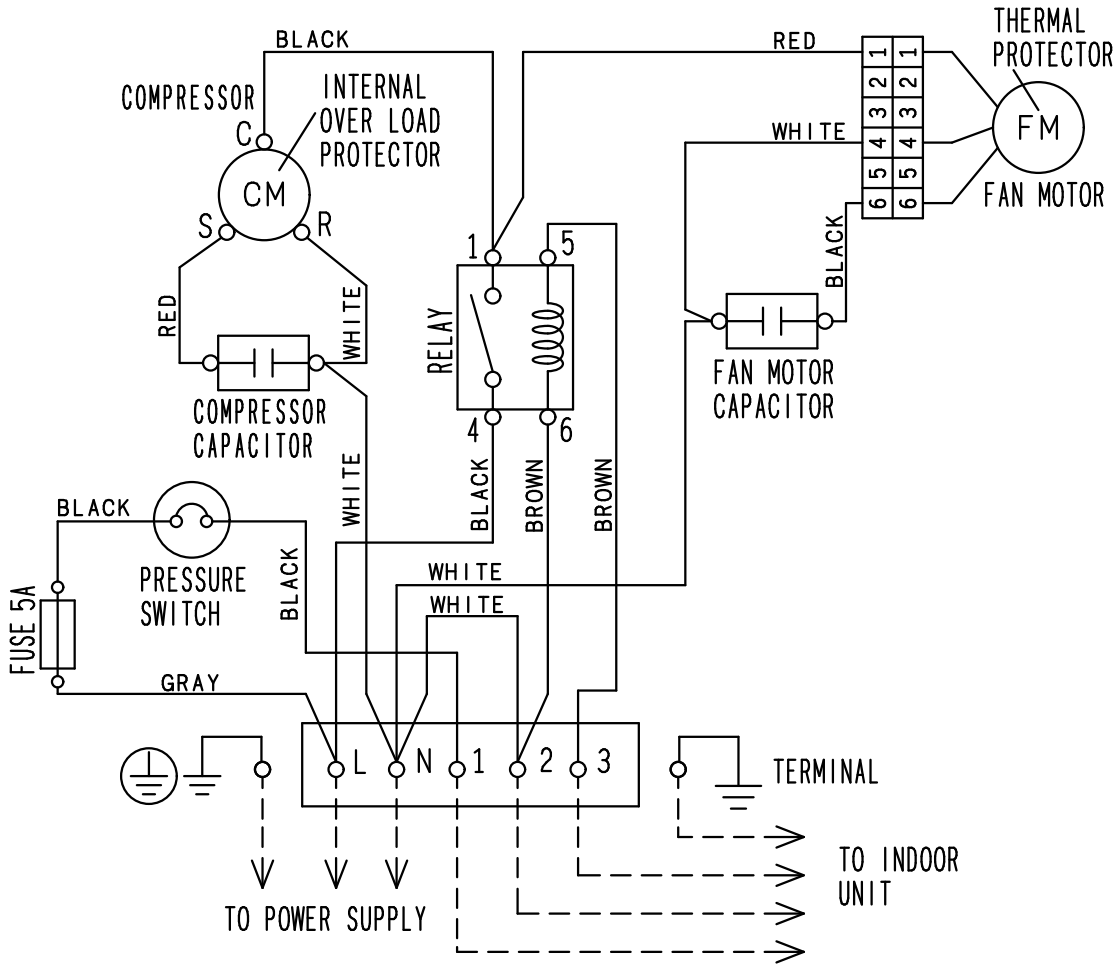

OUTDOOR UNIT
AOGA18-25FBTAH

5. CAPACITY COMPENSATION RATE FOR PIPE LENGTH AND HEIGHT DIFFERENCE

This table is created using the maximum capacity.

■ MODEL: AOGA18FBTAH

COOLING			Pipe length (m)				
			5	7.5	10	15	20
Height difference H (m)	∗1 Indoor unit is higher than outdoor unit	8	-	-	0.983	0.979	0.977
		5	0.997	0.992	0.988	0.984	0.982
		0	1.005	1.000	0.996	0.992	0.990
	∗2 Indoor unit is lower than outdoor unit	-5	1.005	1.000	0.996	0.992	0.990
		-8	-	-	0.996	0.992	0.990

Height difference H

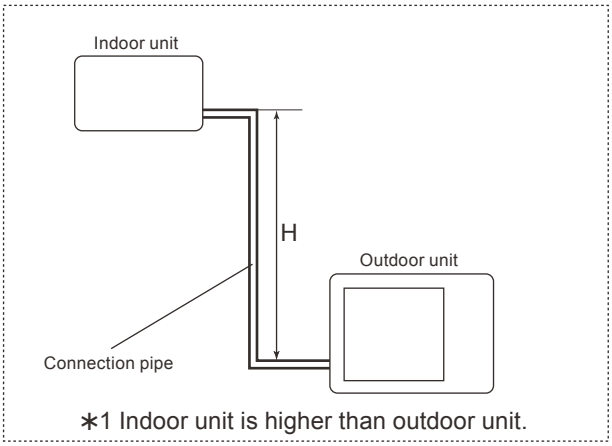

∗1 Indoor unit is higher than outdoor unit.

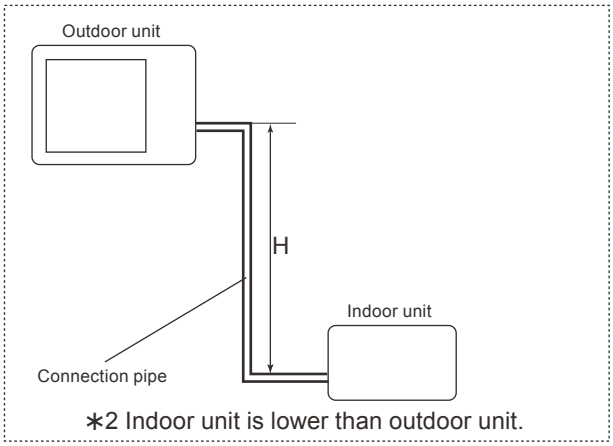

∗2 Indoor unit is lower than outdoor unit.

This table is created using the maximum capacity.

■ MODEL: AOGA25FBTAH

COOLING			Pipe length (m)					
			5	7.5	10	15	20	25
Height difference H (m)	∗1 Indoor unit is higher than outdoor unit	15	-	-	-	0.972	0.970	0.968
		10	-	-	0.979	0.975	0.973	0.971
		7.5	-	0.987	0.983	0.979	0.977	0.975
		5	0.997	0.992	0.988	0.984	0.982	0.980
		0	1.005	1.000	0.996	0.992	0.990	0.988
	∗2 Indoor unit is lower than outdoor unit	-5	1.005	1.000	0.996	0.992	0.990	0.988
		-7.5	-	1.000	0.996	0.992	0.990	0.988
		-10	-	-	0.996	0.992	0.990	0.988
		-15	-	-	-	0.992	0.990	0.988

Height difference H

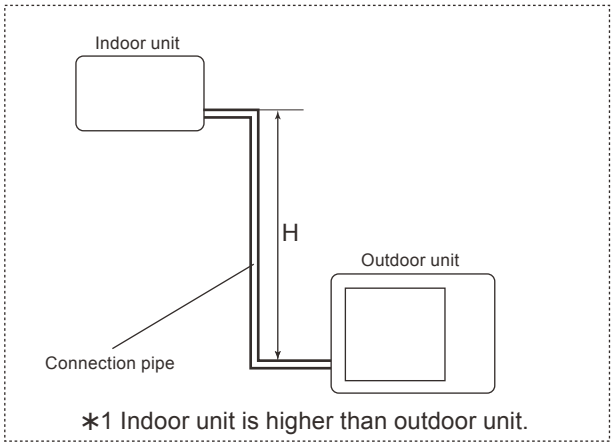

∗1 Indoor unit is higher than outdoor unit.

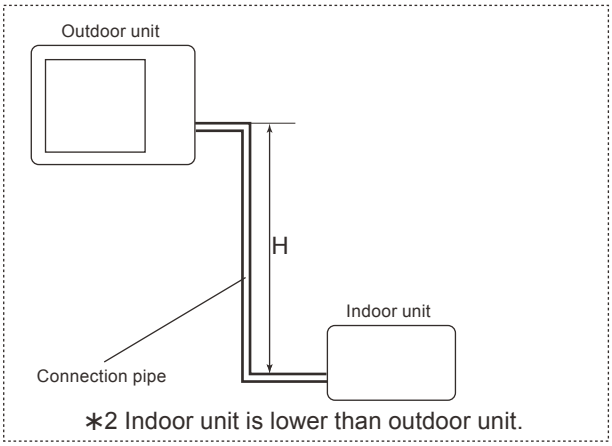

∗2 Indoor unit is lower than outdoor unit.

6. ADDITIONAL CHARGE CALCULATION

■ MODEL: AOGA18FBTAH

Refrigerant type		R410A
Refrigerant amount	g	1,500

● Refrigerant Charge

Total pipe length	m	7.5 or less	15	20(Max.)	20 g/m
Additional charge	g	0	150	250	

■ MODEL: AOGA25FBTAH

Refrigerant type		R410A
Refrigerant amount	g	1,800

● Refrigerant Charge

Total pipe length	m	7.5 or less	10	15	20	25 (Max.)	20g/m
Additional charge	g	0	50	150	250	350	

OUTDOOR UNIT
AOGA18-25FBTAH

7. AIRFLOW

■ MODEL: AOGA18FBTAH

Airflow	
m^3/h	3,200
l/s	889
CFM	1,884

■ MODEL: AOGA25FBTAH

Airflow	
m^3/h	3,300
l/s	917
CFM	1,942

OUTDOOR UNIT
AOGA18-25FBTAH

8. OPERATION NOISE (SOUND PRESSURE)

8-1. NOISE LEVEL CURVE

■ MODEL: AOGA18FBTAH

● Cooling

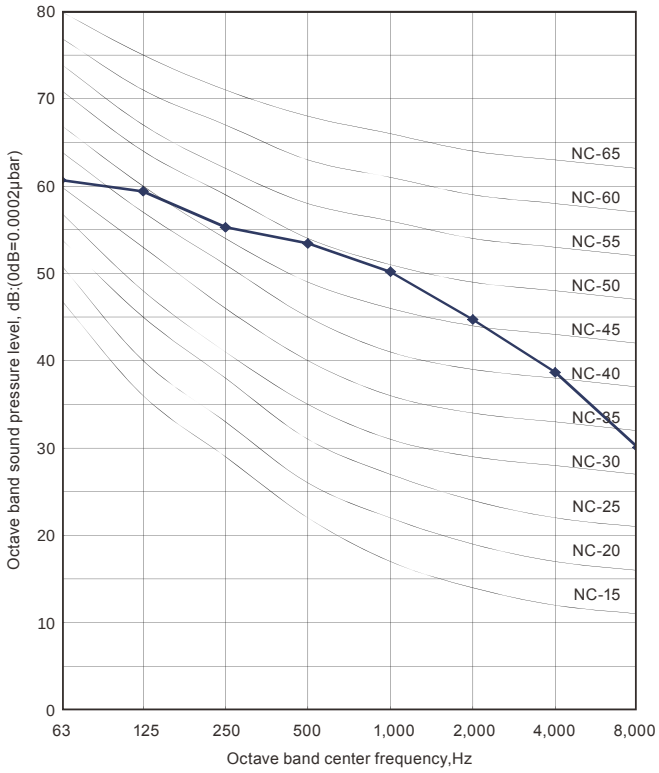

■ MODEL: AOGA25FBTAH

● Cooling

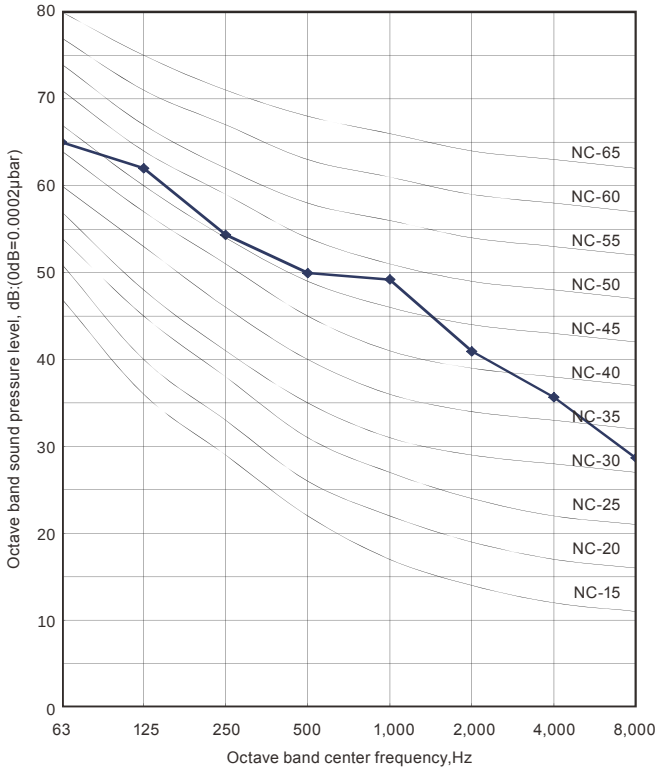

OUTDOOR UNIT
AOGA18-25FBTAH

8-2. SOUND LEVEL CHECK POINT

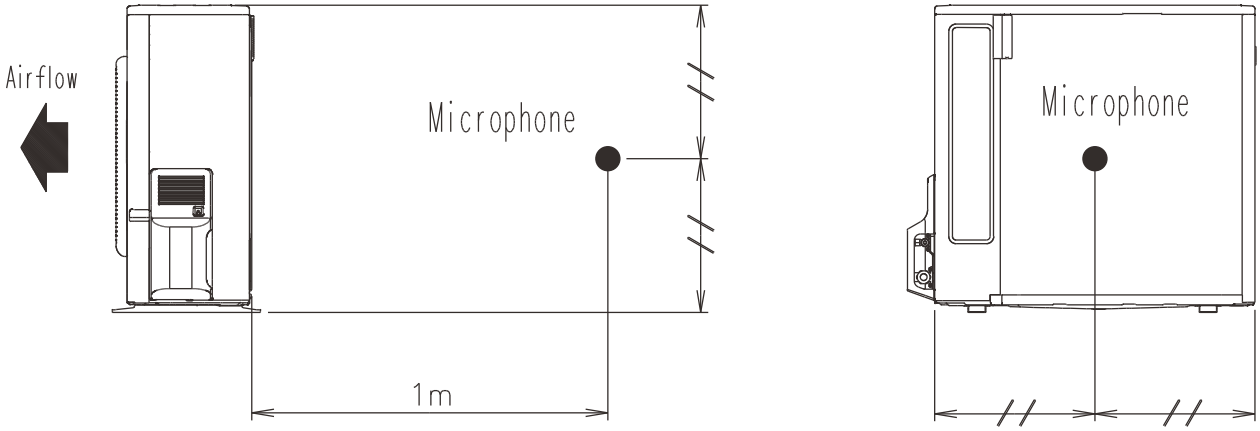

OUTDOOR UNIT
AOGA18-25FBTAH

9. ELECTRIC CHARACTERISTICS

Model name				AOGA18FBTAH	AOGA25FBTAH
Power supply	Voltage		V	220 /240 ~	
	Frequency		Hz	50	
Max. operating current *1			A	13.5	16.7
Starting current			A	42	55
Wiring spec. *2	Circuit breaker current		A	20	30
	Power cable		mm^2	2.5 - 3.0	2.5 - 3.5
	Connection cable *3		mm^2	1.5 - 2.5	
		Limited wiring length	m	21	26

NOTES :

*1: The maximum current is the total current of indoor unit and outdoor unit.

*2: Selected sample based on Japan Electrotechnical Standards and Codes Committee E0005.

*3: Limit voltage drop to less than 2%. Increase conductor size if voltage drop is 2% or more.

OUTDOOR UNIT
AOGA18-25FBTAH

10. SAFETY DEVICES

	Protection form	Models	
		AOGA18FBTAH	AOGA25FBTAH
Fan motor protection	Thermal protection	OFF: 150 ± 5 °C ON: 96 ± 15 °C	
High pressure protection	Pressure switch	OFF: 4.9 ± 0.1 MPa ON: 3.8 ± 0.15 MPa	
Compressor protection	Over Load Protector	OFF: 160 - 165 °C ON: 90 ± 10 °C	

OUTDOOR UNIT
AOGA18-25FBTAH

GENERAL

Refrigerant R410A

AIR CONDITIONER

Duct type

DESIGN & TECHNICAL MANUAL

INDOOR	 ARGA30FMTA	 ARGA36FMTA ARGA45FMTA	 ARGA60FHTA
OUTDOOR	 AOGA30FBTAS	 AOGA36FRTAS AOGA45FRTAS AOGA60FRTAS	

FUJITSU GENERAL LIMITED

DR_AR003EG_04
2015.10.02

Notices:

- Product specifications and design are subject to change without notice for future improvement.
- For further details, please check with our authorized dealer.

CONTENTS

CONTENTS

Part 1. INDOOR UNIT

DUCT TYPE:
ARGA30FMTA
ARGA36FMTA
ARGA45FMTA
ARGA60FHTA

1. Product features

Implemented core technology provides easy-to-use product operations that realize a comfortable space.

1-1. Model lineup

ARGA30FMTA

AOGA30FBTAS

ARGA36FMTA
ARGA45FMTA

ARGA60FHTA

AOGA36FRTAS
AOGA45FRTAS
AOGA60FRTAS

1-2. Features

■ High efficiency technology

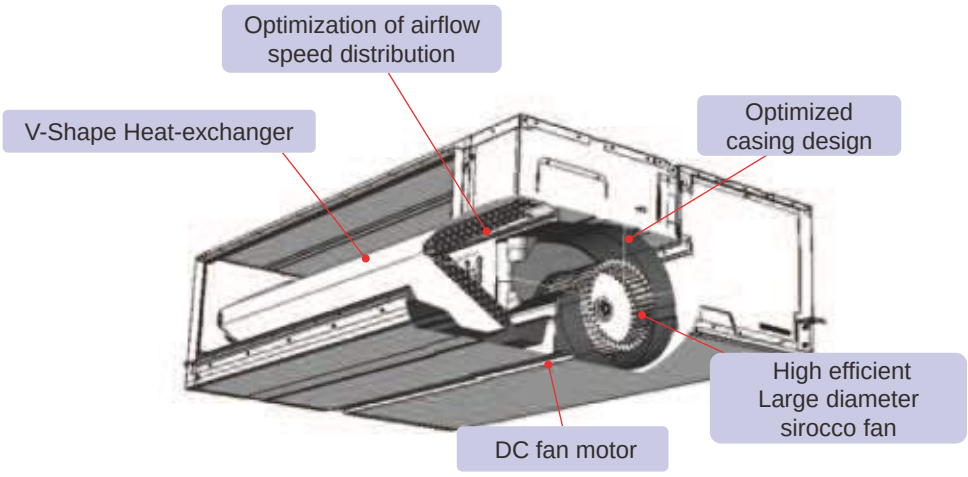

■ Powerful air flow

(BTU)	
30,000	1,600
36,000	2,000
45,000	2,500
60,000	3,350

(Hi:m³/h)

Top class

■ Low noise

Top class operating sound level in cooling operation is provided among the major competitors.

35dB*(A)
(cooling operation)

* At rated point (30 model)

■ High install ability long piping correspondence (AR36,45,60)

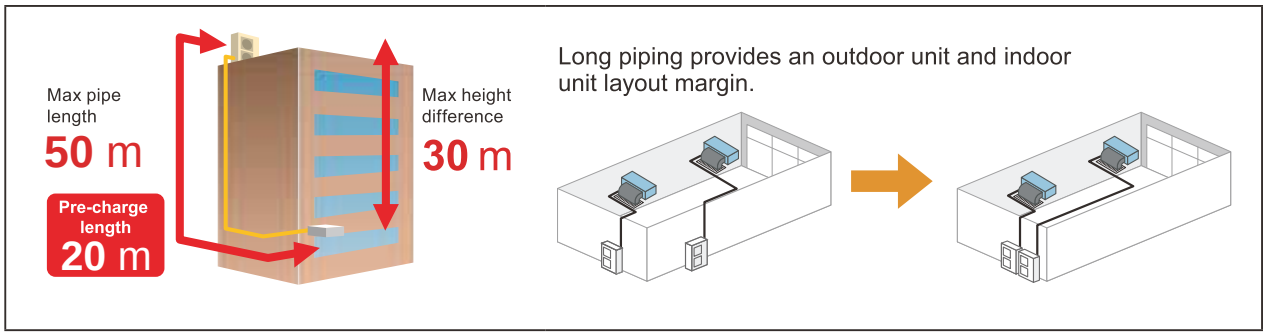

■ Separated indoor unit (AR60 only)

The indoor unit can be moved into the ceiling space through the designated opening.

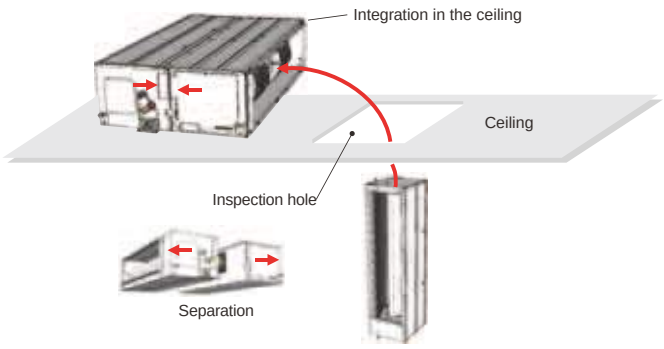

2. Wired remote controller

2-1. Features

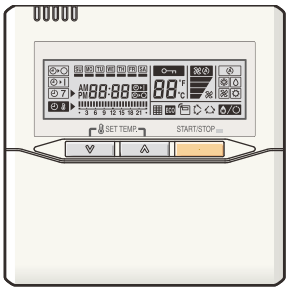

- Various timer setup available (on, off, and weekly).
- Equipped with weekly timer as standard function. (Start/stop function is twice per day for a week.)
- When setting up the timer, operation mode and temperature setup can be changed.
- When a failure occurs, the error code is displayed.
- Error history. (Last 16 error codes can be accessed.)
- The room temperature can be controlled by detecting the temperature accurately with built-in thermo sensor.

■ High performance and compact size

Individual control + Thermo sensor + Weekly timer + Setback timer = Wired remote controller

■ Simple function setting

Setting for selecting function of the air conditioner is performed by remote controller.

■ Accurate and comfortable

Indoor temperature can be detected accurately by the inclusion of a thermo sensor in the body of the wired controller.

Our system can correspond to various scenes.

This wired remote controller and the optional remote sensor allows flexibility in sensor location, and suitable for all requirements.

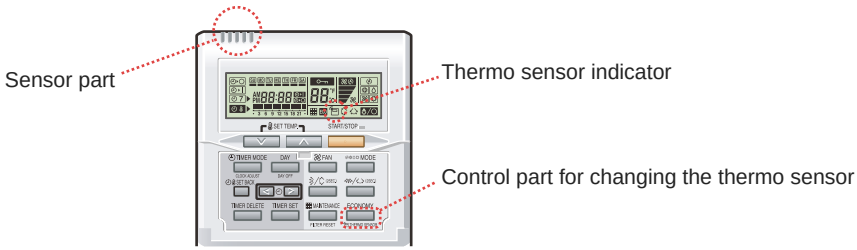

■ Built-in timers

Weekly timer	Setback timer
Possible to set on/off time to operate twice each day of the week.	Possible to set temperature for two time spans and for each day of the week.

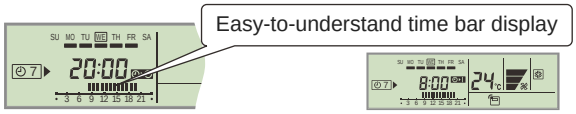

Setup screen example
(Set to Wednesday: 8:00 to 20:00.)

Screen after setup

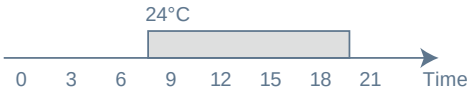

Setup screen example
(Set from Sunday to Saturday: 12:00 to 15:00, 28 ℃.)

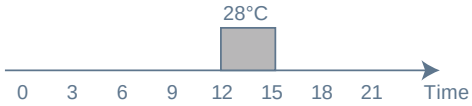

At *"Weekly timer"* + *"Set back timer"* setup

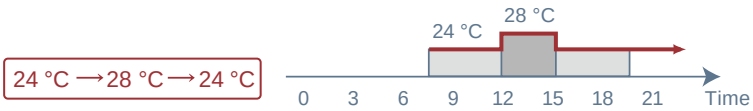

■ Easy-to-understand operation

[Variable timer control]

The operation/display sections are zoned according to time and operation, enabling variable programming to match application.

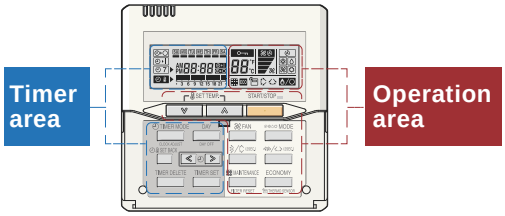

■ Simple installation

Components are compatible with standard switch boxes. Flat-back surface allows equipment to be installed wherever it is needed.

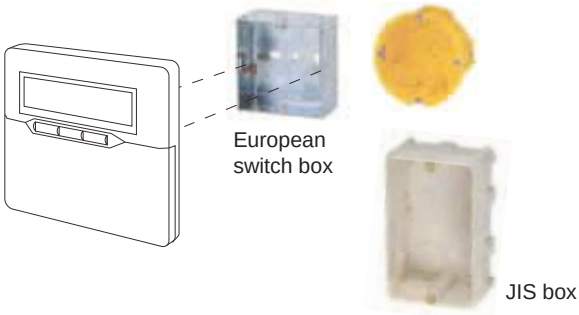

■ System diagram

1 remote controller

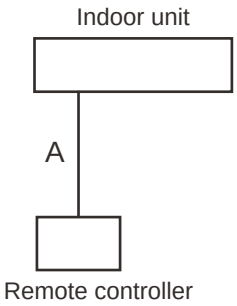

A: Remote controller cable
A≤500 m

2-2. Overview

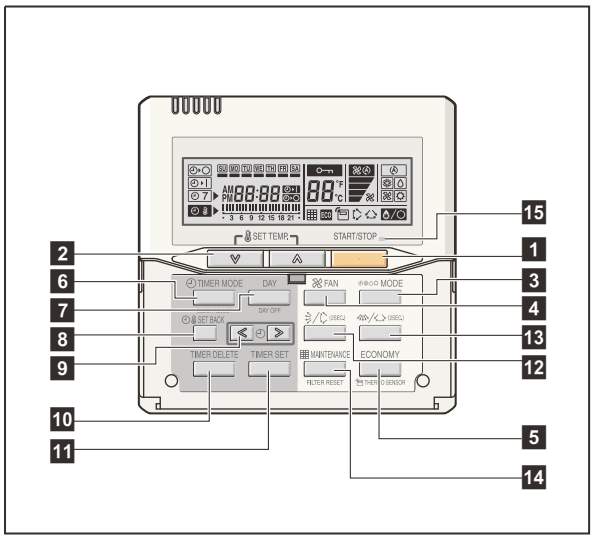

Display panel

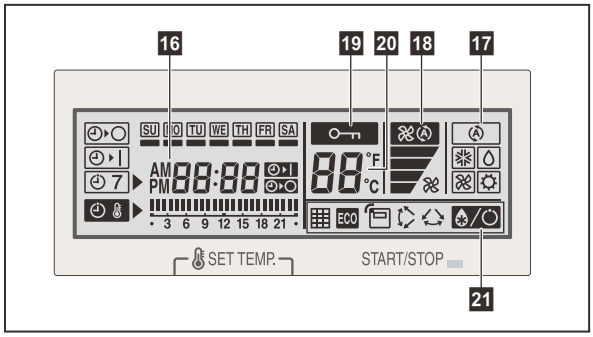

1 START/STOP button
Starts and stops operation.

2 SET TEMP. button
Selects the setting temperature.

3 MODE button
Selects the operating mode (AUTO, , FAN, COOL, and DRY).

4 FAN button
Selects the fan speed AUTO ,QUIET , LOW , MED , and HIGH).

5 ECONOMY (THERMO SENSOR) button
Turns the economy-efficient mode on and off.

6 TIMER MODE (CLOCK ADJUST) button
Selects the timer mode (off timer, on timer, and weekly timer). Sets the current time.

7 DAY (DAY OFF) button
Temporarily cancels one day timer.

8 SET BACK button
Selects the set back timer.

9 Set time button
Pressed to set time.

10 TIMER DELETE button
Deletes the weekly timer schedule.

11 TIMER SET button
Sets the date, hour, minute, and on-off time.

12 Vertical airflow direction and swing button
Push for 2 seconds to change the swing mode.

13 Horizontal airflow direction and swing button
Push for 2 seconds to change the swing mode.

14 FILTER RESET button

15 Operation lamp
Lights during operation and when the timer is on.

16 Timer and clock indicator

17 Operation mode indicator

18 Fan speed indicator

19 Operation lock indicator

20 Temperature indicator

21 Function indicators
- Defrost indicator
- Thermo sensor indicator
- Economy indicator
- Vertical swing indicator
- Horizontal swing indicator
- Filter indicator

NOTE: Functions may differ by type of the indoor unit. For details, refer to the operation manual.

2-3. Specifications

Dimensions and other specifications on the wired remote controller are as follows.

Unit: mm

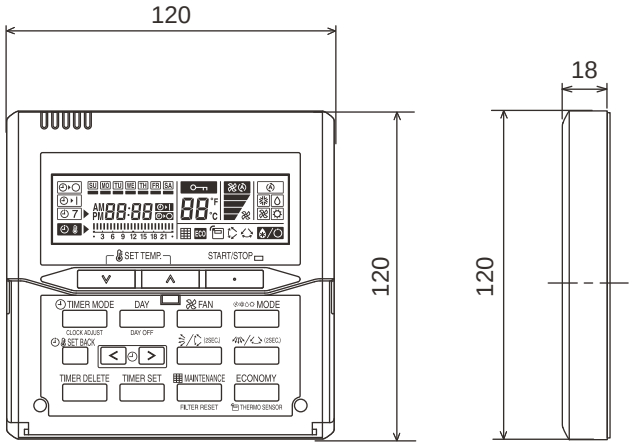

Front View Side View

Size (H × W × D)	mm	120 × 120 × 18
Weight	g	160
Cable length (accessory)	m	10
Power	V	12

2-4. Wring specifications

Use	Cable size	Wire type	Remarks
Remote controller cable	0.33 mm^2 (22 AWG)	Polar 3-core	Use sheathed PVC cable.

3. Specifications

Type					**Duct**
					Cooling only
Model name					**ARGA30FMTA**
Power supply					220—240 V ~ 50 Hz
Available voltage range					198—264 V
Cooling (T1 condition)					
	Capacity			kW	8.3—8.3
				Btu/h	28400—28400
	Input power			kW	2.40—2.46
	Current			A	11.3—11.1
	EER			Btu/hW	11.83—11.54
	Sensible capacity			kW	6.68—6.68
	Power factor			%	96.5—92.3
	Moisture removal			L/h (pints/h)	2.3—2.3 (4.0—4.0)
Maximum operating current *1		Cooling		A	23.0
Fan	Airflow rate	Cooling	HIGH	m^3/h	1600
			MED		1500
			LOW		1400
			QUIET		1250
	Type × Q'ty				Sirocco fan × 2
	Motor output			W	197
Recommended static pressure				Pa	30 to 120
Sound pressure level *2		Cooling	HIGH	dB(A)	35
			MED		34
			LOW		32
			QUIET		29
Heat exchanger type		Dimensions (H × W × D)		mm	420 × 758 × 39.9
		Fin pitch			1.4
		Rows × Stages			3 × 20
		Pipe type			Copper
		Fin type			Aluminum
Enclosure		Material			Steel
		Color			—
Dimensions (H × W × D)	Net			mm	300 × 1000 × 700
	Gross				400 × 1238 × 875
Weight	Net			kg	35
	Gross				43
Connection pipe	Size	Liquid		mm (in)	Ø 9.52 (Ø 3/8)
		Gas			Ø 15.88 (Ø 5/8)
	Method				Flare
Operation range		Cooling		°C	18 to 32
				%RH	80 or less
Remote controller type					Wired
Drain hose	Material				PVC
	Size			mm	Ø 25 (I.D.), Ø 32 (O.D.)

NOTES:

- Specifications are based on the following conditions:
  - Cooling (T1): Indoor temperature of 27 °CDB/19 °CWB, and outdoor temperature of 35 °CDB/24 °CWB.
  - Standard static pressure: 47 Pa
  - Pipe length: 7.5 m, Height difference: 0 m. (Between outdoor unit and indoor unit.)
- Protective function might work when using it outside the operation range.
- *1: Maximum current is the maximum value when operated within the operation range.
- *2: Sound pressure level: Measured after a 2-m duct to the outlet port and a 1-m duct to the suction port are installed.
  - Measured values in manufacturer's anechoic chamber.
  - Because of the surrounding sound environment, the sound levels measured in actual installation conditions might be higher than the specified values here.

Type					Duct		
					Cooling only		
Model name					**ARGA36FMTA**	**ARGA45FMTA**	**ARGA60FHTA**
Power supply					3N 380—415 V ~ 50 Hz		
Available voltage range					342—457 V		
Cooling (T1 condition)							
	Capacity			kW	10.3—10.3	13.5—13.5	15.2 —15.2
				Btu/h	35000—35000	46000—46000	52000—52000
	Input power			kW	3.01—3.01	4.00—4.00	4.47—4.47
	Current			A	5.2—5.0	6.9—6.5	7.8—7.5
	EER			Btu/hW	11.63—11.63	11.50—11.50	11.63—11.63
	Sensible capacity			kW	8.54—8.54	10.8—10.8	12.92—12.92
	Power factor			%	87.9—83.8	88.1—85.6	87.1—82.9
	Moisture removal			L/h (pints/h)	3.0—3.0 (5.3—5.3)	3.3 —3.3 (5.8—5.8)	3.4—3.4 (6.0—6.0)
Maximum operating current *1		Cooling		A	10.5	14.0	15.5
Fan	Airflow rate	Cooling	HIGH	m^3/h	2000	2500	3350
			MED		1850	2350	3150
			LOW		1650	2200	2950
			QUIET		1500	2000	2650
	Type × Q'ty				Sirocco fan × 3		Sirocco fan × 2
	Motor output			W	197		375
Recommended static pressure				Pa	30 to 120		60 to 160
Sound pressure level *2		Cooling	HIGH	dB(A)	37	40	41
			MED		35	38	40
			LOW		34	37	39
			QUIET		32	35	38
Heat exchanger type		Dimensions (H × W × D)		mm	420 × 1158 × 39.9		546 × 1158 × 39.9
		Fin pitch			1.4		1.3
		Rows × Stages			3 × 20		3 × 26
		Pipe type			Copper		
		Fin type			Aluminum		
Enclosure		Material			Steel		
		Color			—		
Dimensions (H × W × D)	Net			mm	300 × 1400 × 700		360 × 1400 × 850
	Gross				400 × 1638 × 875		460 × 1640 × 1030
Weight	Net			kg	44		67
	Gross				53		77
Connection pipe	Size	Liquid		mm (in)	Ø 9.52 (Ø 3/8)		
		Gas			Ø 19.05 (Ø 3/4)		
	Method				Flare		
Operation range		Cooling		°C	18 to 32		
				%RH	80 or less		
Remote controller type					Wired		
Drain hose	Material				PVC		
	Size			mm	Ø 25 (I.D.), Ø 32 (O.D.)		

NOTES:

- Specifications are based on the following conditions:
  - Cooling (T1): Indoor temperature of 27 °CDB/19 °CWB, and outdoor temperature of 35 °CDB/24 °CWB.
  - Standard static pressure: 60 Pa
  - Pipe length: 7.5 m, Height difference: 0 m. (Between outdoor unit and indoor unit.)
- Protective function might work when using it outside the operation range.
- *1: Maximum current is the maximum value when operated within the operation range.
- *2: Sound pressure level: Measured after a 2-m duct to the outlet port and a 1-m duct to the suction port are installed.
  - Measured values in manufacturer's anechoic chamber.
  - Because of the surrounding sound environment, the sound levels measured in actual installation conditions might be higher than the specified values here.

4. Dimensions

4-1. Model: ARGA30FMTA

Unit: mm

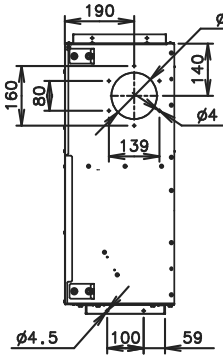

Side view (L)

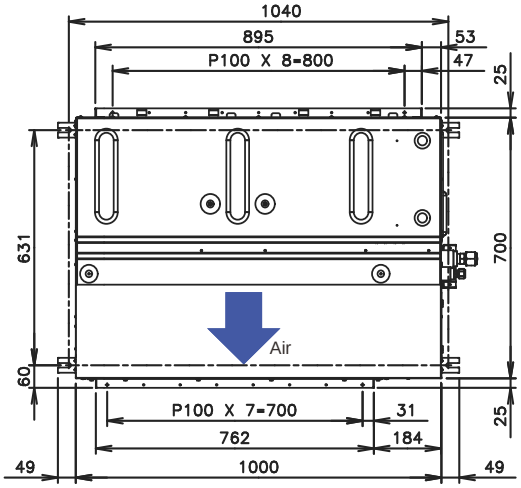

Top view

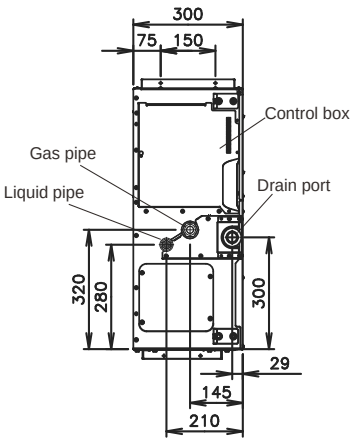

Side view (R)

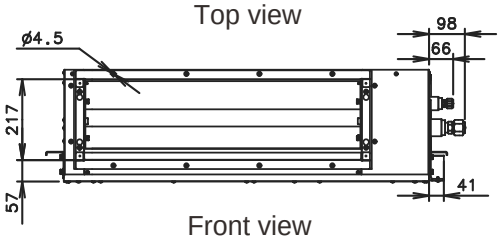

Front view

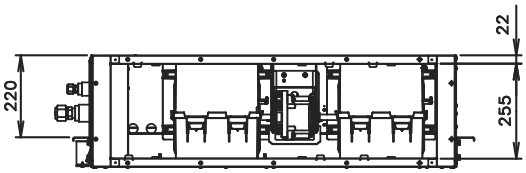

Rear view

4-2. Models: ARGA36FMTA and ARGA45FMTA

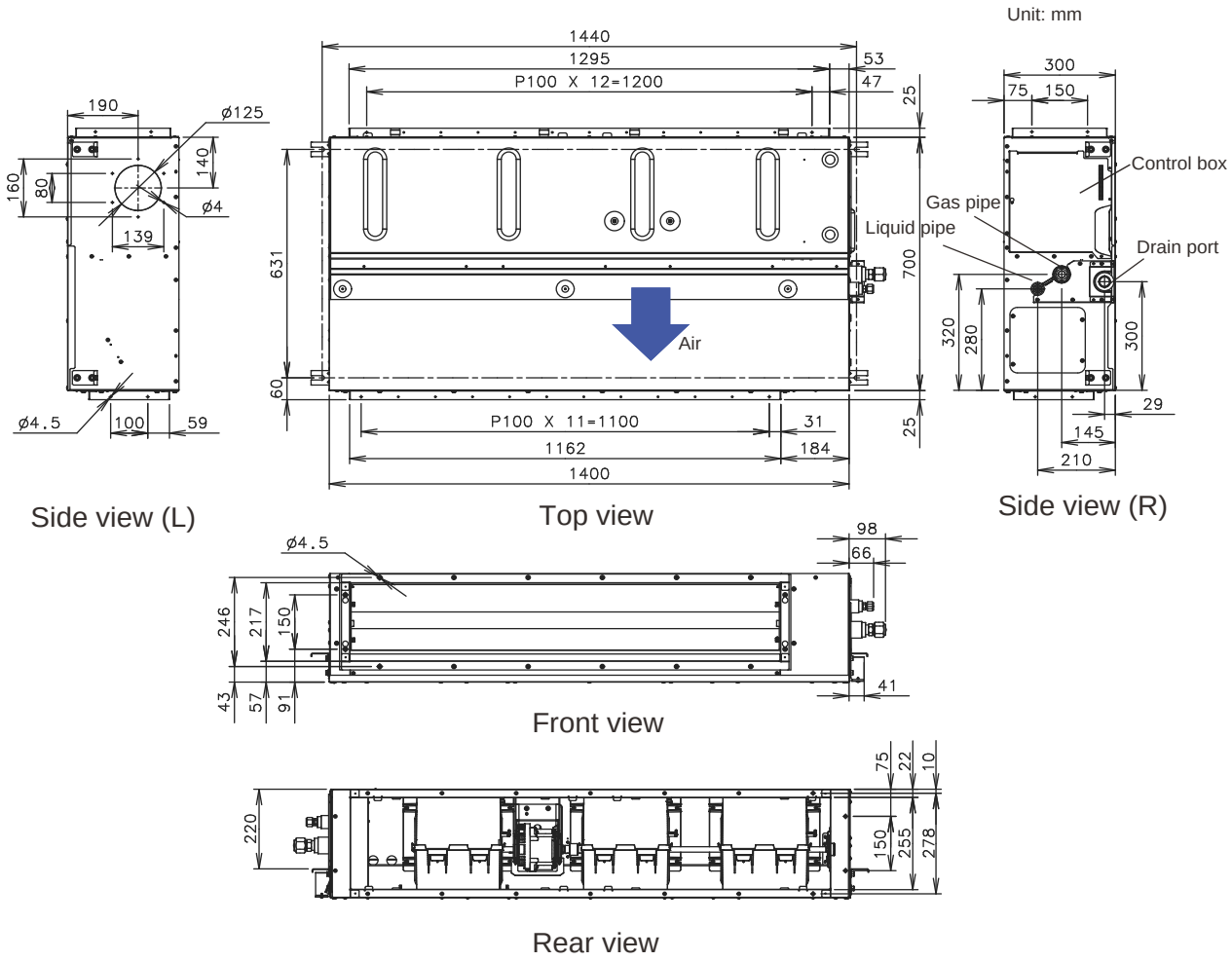

4-3. Model: ARGA60FHTA

Unit: mm

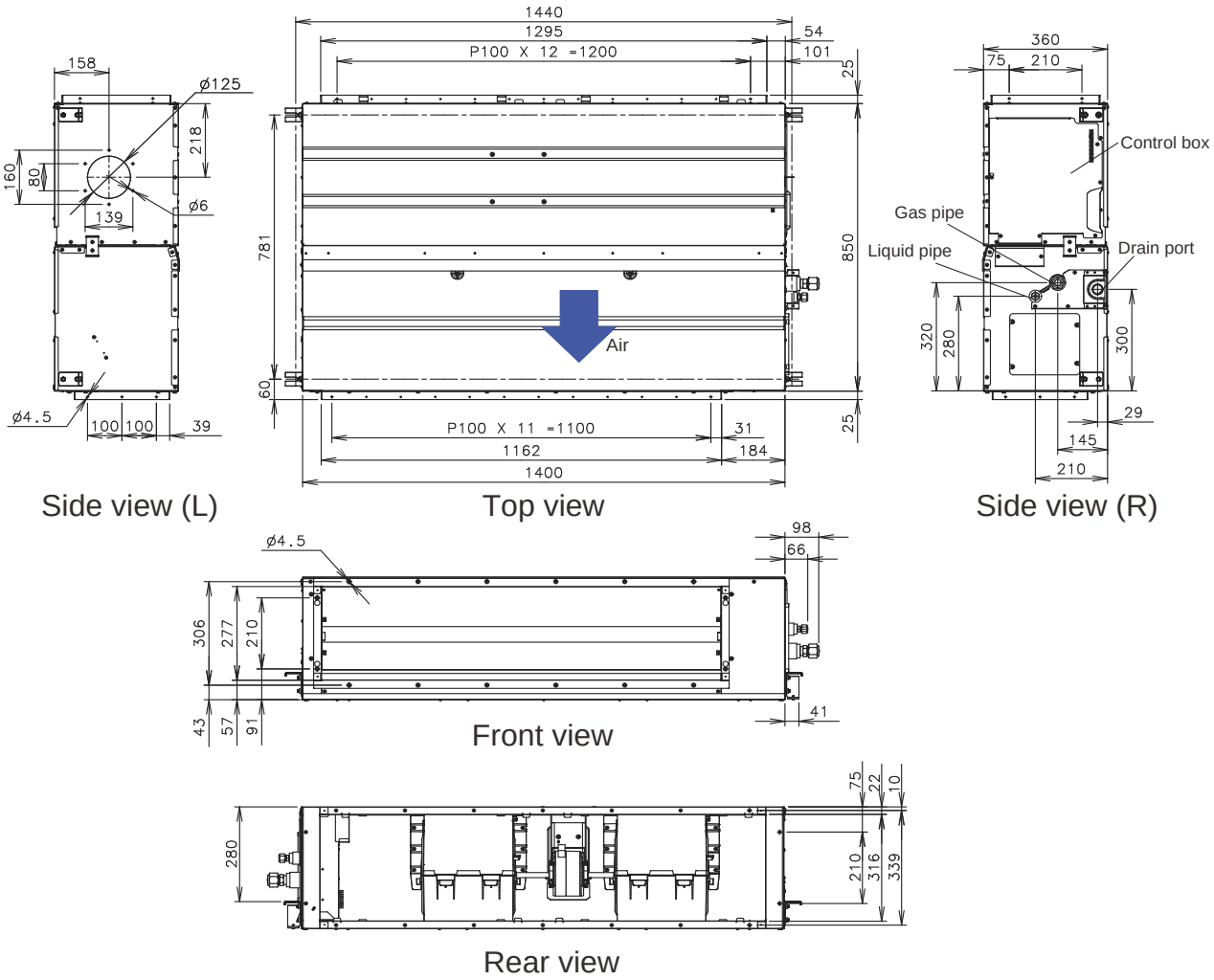

Side view (L)

Top view

Side view (R)

Front view

Rear view

4-4. Installation space requirement

Provide sufficient installation space for product safety.

■ Models: ARGA30FMTA, ARGA36FMTA, and ARGA45FMTA

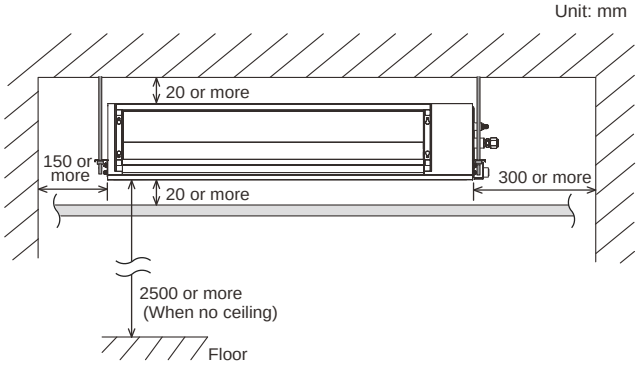

■ Model: ARGA60FHTA

- **Installation by which service space is made on top of the unit (recommended):**

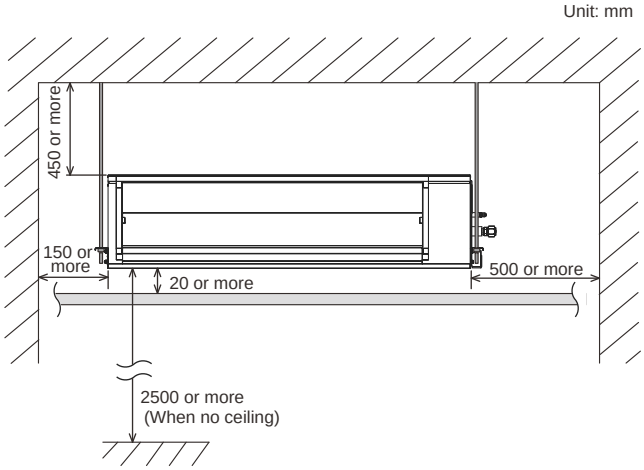

- **Installation by which service is carried out from the bottom of the unit:**

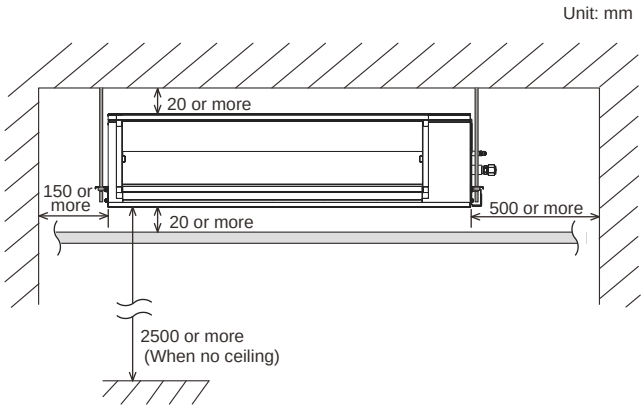

4-5. Maintenance space requirement

For future maintenance and service access, provide sufficient maintenance space.

NOTE: Do not place any wiring or illumination in the maintenance space, as they will impede service.

■ Model: ARGA30FMTA

- Provide a service access for maintenance purposes.

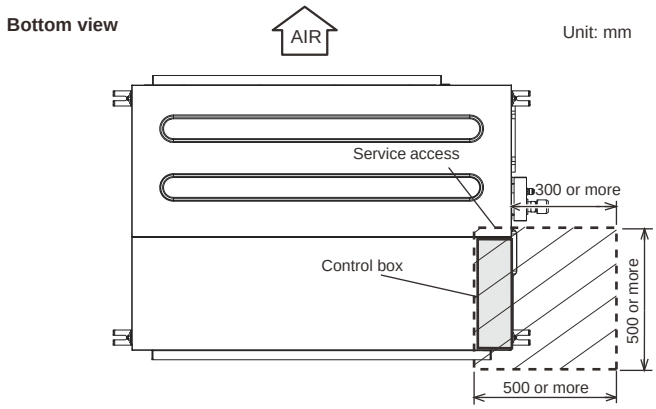

- The service access necessary for fan units and filter maintenance.

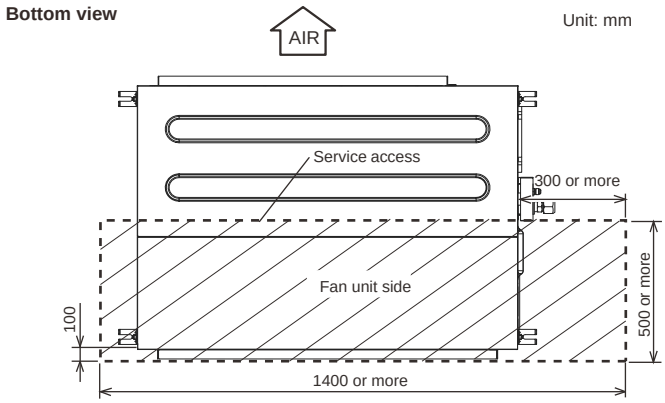

■ Models: ARGA36FMTA and ARGA45FMTA

- Provide a service access for maintenance purposes.

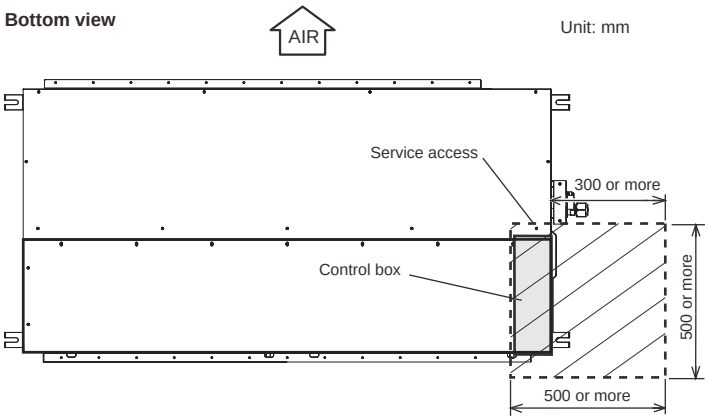

- The service access necessary for fan units and filter maintenance.

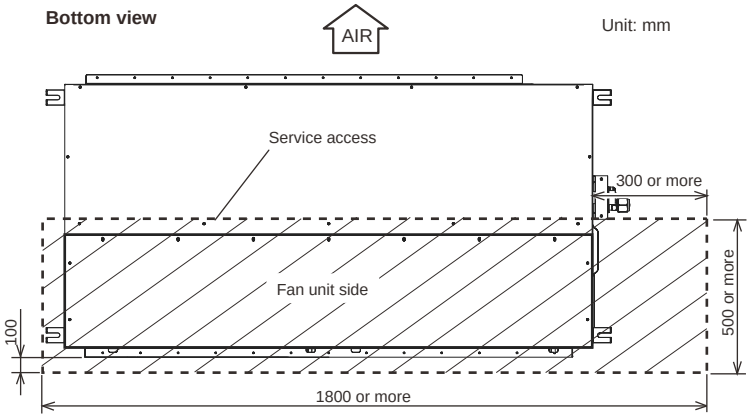

■ Model: ARGA60FHTA

Unit: mm

Bottom view

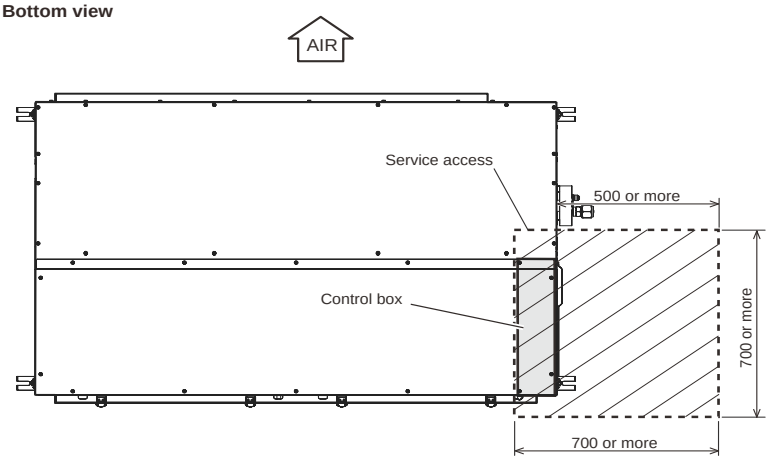

Bottom view

Unit: mm

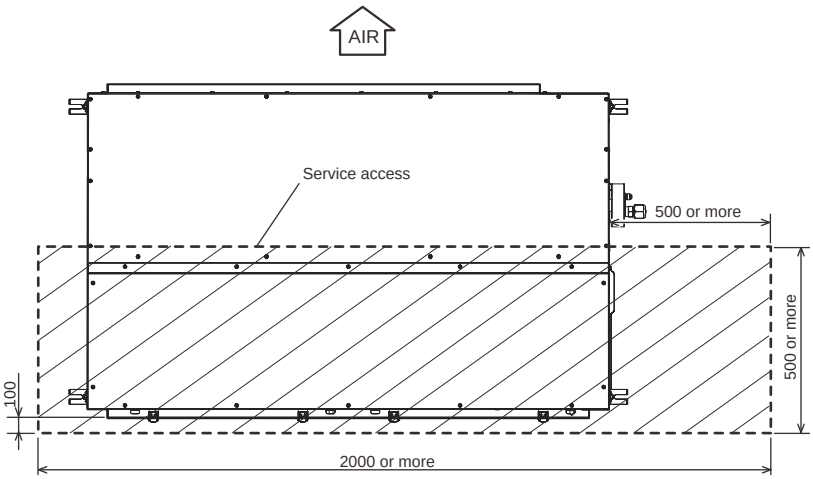

5. Wiring diagrams

5-1. Model: ARGA30FMTA

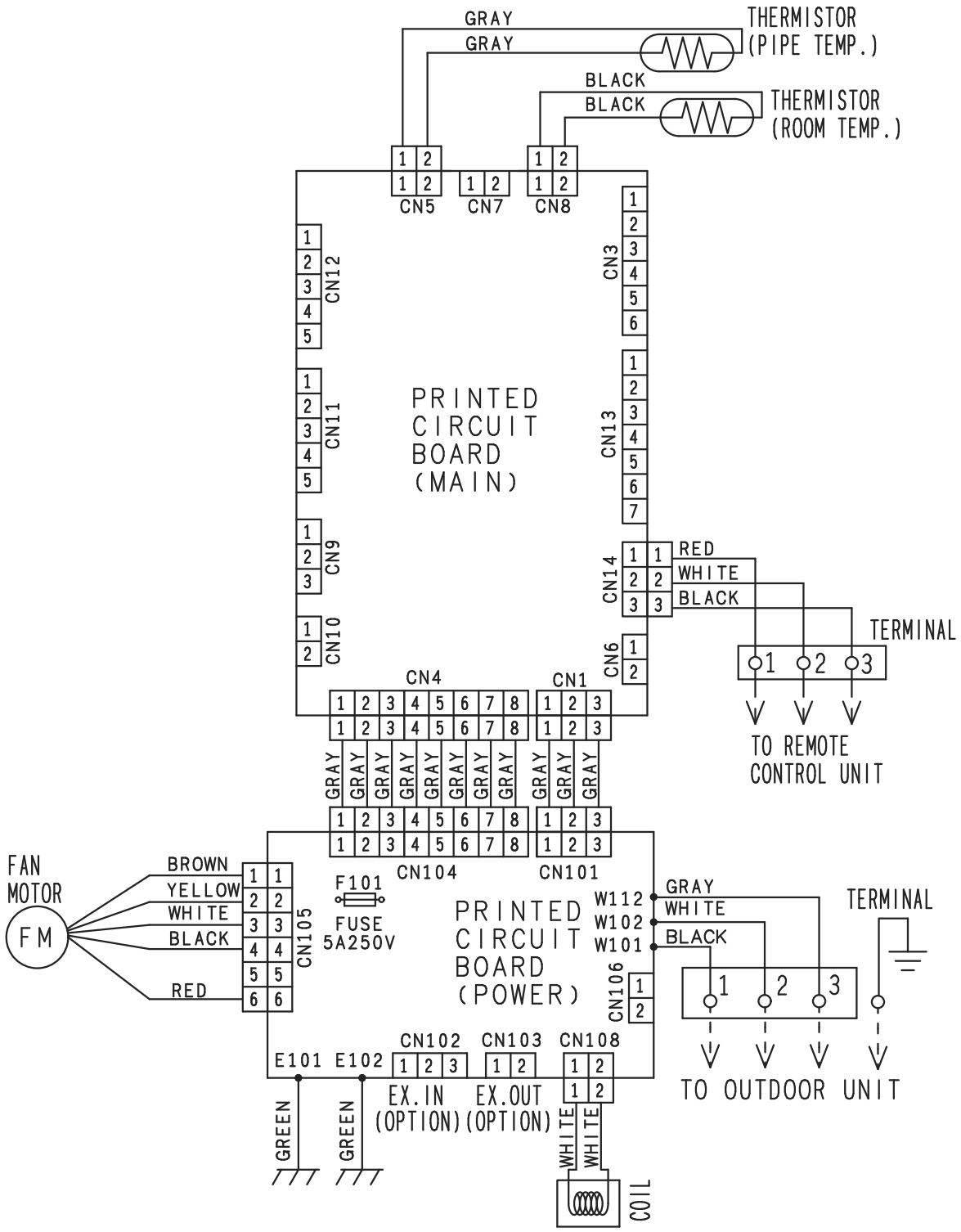

5-2. Models: ARGA36FMTA and ARGA45FMTA

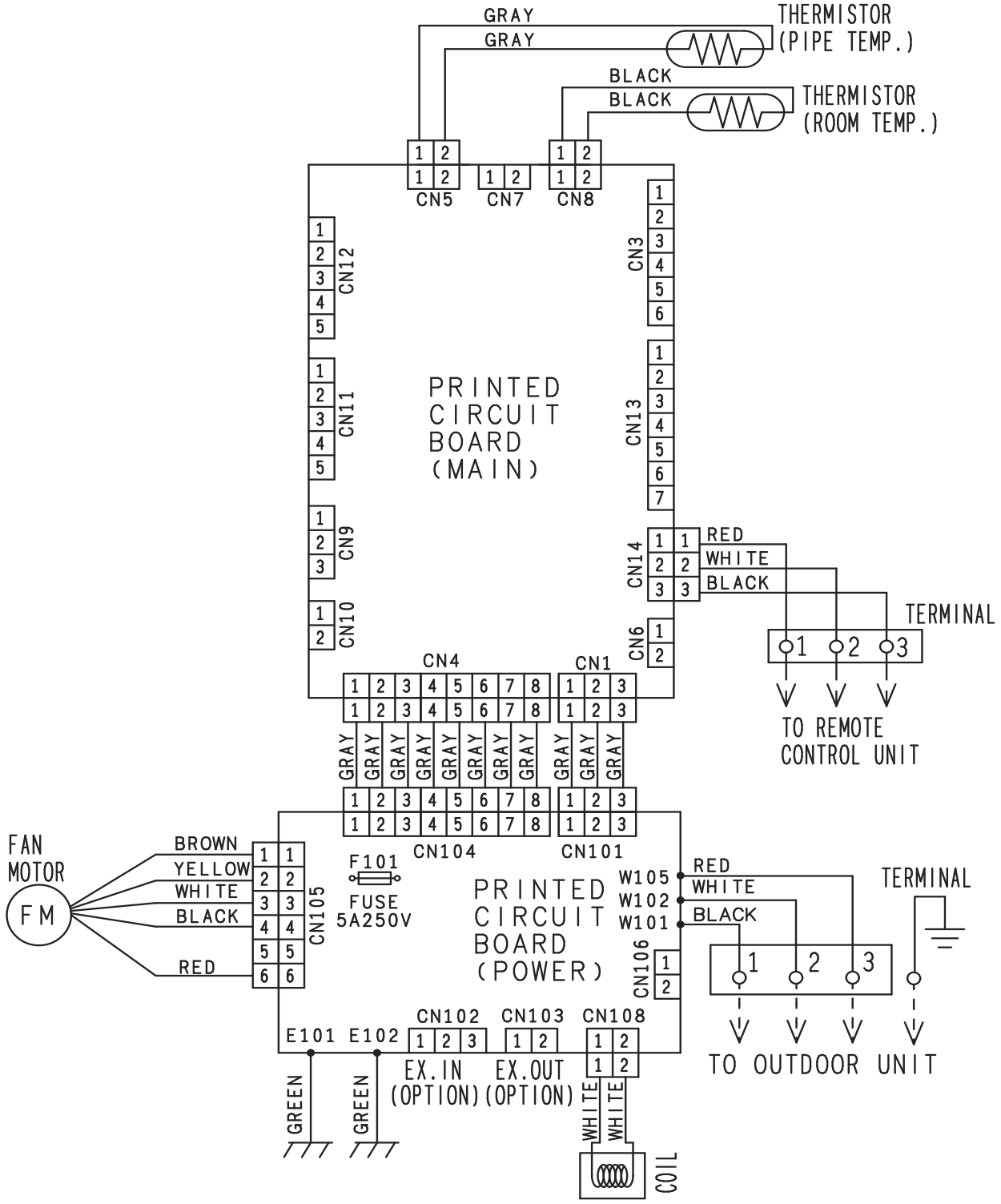

5-3. Model: ARGA60FHTA

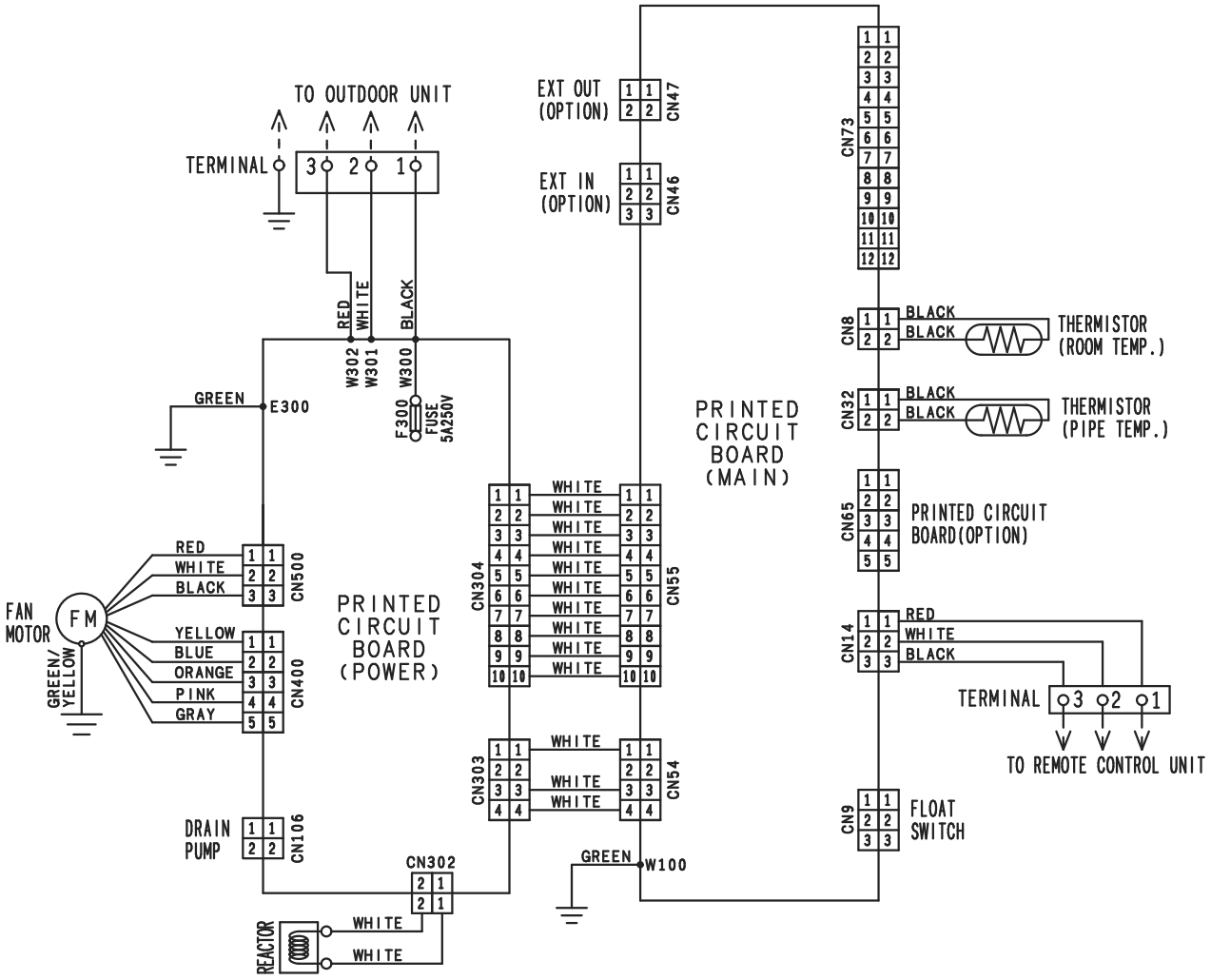

6. Capacity table

Capacity tables show each of following values calculated based on the outdoor temperature and the indoor temperature, under given Airflow Rate (AFR):

For cooling capacity: Total Capacity (TC), Sensible Heat Capacity (SHC), and Input Power (IP)

1 kW = 3412 Btu/h

6-1. Cooling capacity

■ Model: ARGA30FMTA

AFR	m^3/h	1600

		Indoor temperature																				
	°CDB	18			21			23			25			27			29			32		
	°CWB	12			15			16			18			19			21			23		
Outdoor temperature	°CDB	TC	SHC	IP	TC	SHC	IP	TC	SHC	IP	TC	SHC	IP	TC	SHC	IP	TC	SHC	IP	TC	SHC	IP
		kW			kW			kW			kW			kW			kW			kW		
	21	6.92	5.87	1.84	7.85	6.41	1.84	8.13	6.54	1.84	8.66	6.75	1.85	8.89	6.83	1.87	9.34	6.91	1.86	9.73	6.92	1.87
	25	6.85	5.86	2.00	7.77	6.39	2.00	8.05	6.52	2.00	8.57	6.73	2.01	8.80	6.81	2.03	9.25	6.89	2.02	9.64	6.90	2.03
	30	6.70	5.80	2.18	7.60	6.32	2.18	7.87	6.46	2.19	8.38	6.66	2.19	8.61	6.74	2.22	9.05	6.82	2.21	9.42	6.82	2.22
	35	6.46	5.75	2.39	7.33	6.27	2.39	7.59	6.40	2.40	8.08	6.61	2.40	8.30	6.68	2.43	8.72	6.76	2.42	9.09	6.77	2.43
	40	6.07	5.59	2.54	6.88	6.10	2.54	7.13	6.23	2.55	7.59	6.43	2.55	7.80	6.50	2.58	8.20	6.58	2.57	8.54	6.59	2.58
	46	5.56	5.35	2.85	6.31	5.83	2.86	6.54	5.96	2.86	6.96	6.15	2.87	7.15	6.22	2.90	7.51	6.29	2.89	7.83	6.30	2.90
	50	5.16	5.15	3.08	5.85	5.62	3.09	6.06	5.74	3.09	6.45	5.92	3.10	6.63	5.99	3.14	6.96	6.06	3.12	7.25	6.06	3.14
	52	4.93	5.04	3.21	5.60	5.50	3.21	5.80	5.61	3.21	6.17	5.79	3.22	6.34	5.86	3.26	6.66	5.93	3.24	6.94	5.93	3.26

■ Model: ARGA36FMTA

AFR	m^3/h	2000

		Indoor temperature																				
	°CDB	18			21			23			25			27			29			32		
	°CWB	12			15			16			18			19			21			23		
Outdoor temperature	°CDB	TC	SHC	IP	TC	SHC	IP	TC	SHC	IP	TC	SHC	IP	TC	SHC	IP	TC	SHC	IP	TC	SHC	IP
		kW			kW			kW			kW			kW			kW			kW		
	21	10.31	8.47	2.60	10.54	8.50	2.64	10.79	8.55	2.67	11.21	9.05	2.72	11.38	9.03	2.75	11.71	8.95	2.80	12.02	9.35	2.84
	25	10.72	8.72	2.43	10.99	8.76	2.46	11.23	8.81	2.48	11.65	9.30	2.52	11.83	9.26	2.53	12.15	9.17	2.57	12.44	9.55	2.59
	30	10.03	8.31	2.66	10.32	8.37	2.69	10.56	8.47	2.72	10.96	8.96	2.76	11.13	8.94	2.77	11.45	8.85	2.81	11.76	9.26	2.84
	35	9.34	7.97	2.91	9.52	8.03	2.92	9.76	8.08	2.95	10.12	8.57	2.99	10.30	8.54	3.01	10.63	8.49	3.05	10.95	8.93	3.09
	40	8.36	6.02	3.08	8.73	6.73	3.16	9.00	7.36	3.22	9.53	8.03	3.29	9.76	8.23	3.30	10.19	8.58	3.34	10.96	8.71	3.37
	46	7.96	6.02	3.47	8.35	6.77	3.57	8.63	7.27	3.64	9.17	7.92	3.69	9.20	8.17	3.73	9.82	8.50	3.78	10.56	8.93	3.80
	50	6.87	5.93	3.68	7.45	6.47	3.80	7.68	6.83	3.89	8.21	7.42	3.98	8.13	7.63	3.97	8.77	8.04	4.04	9.49	8.71	4.04
	52	6.41	5.89	3.78	7.07	6.35	3.90	7.28	6.63	3.99	7.80	7.18	4.09	7.64	7.39	4.09	8.33	7.81	4.16	9.02	8.62	4.15

■ Model: ARGA45FMTA

AFR	m^3/h	2500

		Indoor temperature																				
	°CDB	18			21			23			25			27			29			32		
	°CWB	12			15			16			18			19			21			23		
Outdoor temperature	°CDB	TC	SHC	IP	TC	SHC	IP	TC	SHC	IP	TC	SHC	IP	TC	SHC	IP	TC	SHC	IP	TC	SHC	IP
		kW			kW			kW			kW			kW			kW			kW		
	21	13.51	10.69	3.45	13.81	10.74	3.51	14.14	10.80	3.55	14.69	11.45	3.62	14.92	11.41	3.65	15.35	11.31	3.72	15.74	11.81	3.77
	25	14.05	11.02	3.24	14.39	11.07	3.27	14.72	11.14	3.30	15.28	11.75	3.35	15.51	11.70	3.36	15.93	11.58	3.41	16.31	12.07	3.45
	30	13.16	10.52	3.55	13.53	10.58	3.58	13.84	10.70	3.60	14.36	11.32	3.65	14.60	11.29	3.68	15.01	11.19	3.73	15.42	11.70	3.78
	35	12.24	10.07	3.86	12.47	10.15	3.88	12.79	10.21	3.91	13.28	10.82	3.97	13.50	10.80	4.00	13.94	10.73	4.05	14.35	11.28	4.11
	40	10.96	7.61	4.10	11.44	8.51	4.20	11.80	9.31	4.28	12.49	10.15	4.36	12.79	10.41	4.38	13.32	10.86	4.45	14.37	11.02	4.48
	46	10.31	7.51	4.56	10.80	8.46	4.69	11.17	9.09	4.77	11.86	9.90	4.88	11.90	10.20	4.89	12.70	10.61	4.96	13.67	11.16	4.99
	50	8.89	7.41	4.83	9.63	8.08	4.98	9.94	8.53	5.10	10.62	9.26	5.22	10.52	9.53	5.21	11.36	10.03	5.30	12.27	10.86	5.30
	52	8.28	7.35	4.96	9.15	7.93	5.12	9.42	8.28	5.25	10.10	8.97	5.37	9.89	9.22	5.36	10.78	9.75	5.45	11.66	10.75	5.44

■ Model: ARGA60FHTA

AFR	m^3/h	3350

		Indoor temperature																				
	°CDB	18			21			23			25			27			29			32		
	°CWB	12			15			16			18			19			21			23		
Outdoor temperature	°CDB	TC	SHC	IP	TC	SHC	IP	TC	SHC	IP	TC	SHC	IP	TC	SHC	IP	TC	SHC	IP	TC	SHC	IP
		kW			kW			kW			kW			kW			kW			kW		
	21	12.46	10.11	4.05	13.37	10.21	4.12	13.82	10.27	4.17	14.90	12.00	4.25	15.35	12.36	4.28	15.98	13.37	4.36	16.89	14.30	4.43
	25	15.18	9.71	3.64	15.52	11.35	3.70	15.86	12.22	3.73	16.60	13.20	3.79	16.93	13.43	3.82	17.58	13.78	3.85	18.86	13.98	3.94
	30	14.52	9.41	3.94	14.90	10.98	4.01	15.28	11.96	4.05	16.02	12.99	4.12	16.31	13.25	4.16	16.98	13.65	4.19	18.16	13.75	4.28
	35	13.90	8.81	4.22	13.90	10.66	4.31	14.38	11.44	4.35	15.13	12.46	4.43	15.20	12.92	4.47	16.25	13.06	4.50	17.35	13.54	4.60
	40	12.35	9.11	4.58	12.89	10.17	4.69	13.28	11.14	4.78	14.07	12.15	4.88	14.41	12.44	4.89	15.01	12.99	4.96	16.17	13.18	5.00
	46	11.51	8.93	5.06	12.07	10.04	5.20	12.47	10.78	5.30	13.26	11.74	5.41	13.30	12.11	5.42	14.20	12.60	5.50	15.27	13.23	5.54
	50	9.93	8.80	5.36	10.77	9.59	5.52	11.11	10.13	5.66	11.87	10.99	5.78	11.75	11.31	5.78	12.69	11.91	5.88	13.72	12.90	5.88
	52	9.27	8.73	5.50	10.22	9.40	5.68	10.53	9.83	5.82	11.28	10.65	5.95	11.06	10.94	5.94	12.04	11.59	6.04	13.05	12.77	6.04

7. Fan performance

7-1. Fan performance curve

■ Model: ARGA30FMTA

Fan speed	Item		Static pressure mode							
			Mode 1		Mode 2		Mode 3		Mode 4	
			Normal		High static pressure 1		High static pressure 2		High static pressure 3	
HIGH	Static pressure	Pa	30	55	60	75	90	100	110	120
	Airflow	m^3/h	1820	1520	1600	1400	1530	1350	1400	1250
		l/s	506	422	444	389	425	375	389	347
		CFM	1071	894	941	824	900	794	824	735
MED	Static pressure	Pa	23	45	50	63	73	82	90	100
	Airflow	m^3/h	1680	1400	1490	1310	1380	1240	1280	1150
		l/s	467	389	414	364	383	344	356	319
		CFM	988	824	876	771	812	729	753	676
LOW	Static pressure	Pa	16	38	42	53	59	67	72	81
	Airflow	m^3/h	1540	1280	1360	1210	1270	1130	1170	1050
		l/s	428	356	378	336	353	314	325	292
		CFM	906	753	800	712	747	665	688	618
QUIET	Static pressure	Pa	10	29	34	42	44	52	56	64
	Airflow	m^3/h	1370	1120	1210	1100	1110	980	1020	920
		l/s	381	311	336	306	308	272	283	256
		CFM	806	659	712	647	653	576	600	541

Factory setting is Mode 1.

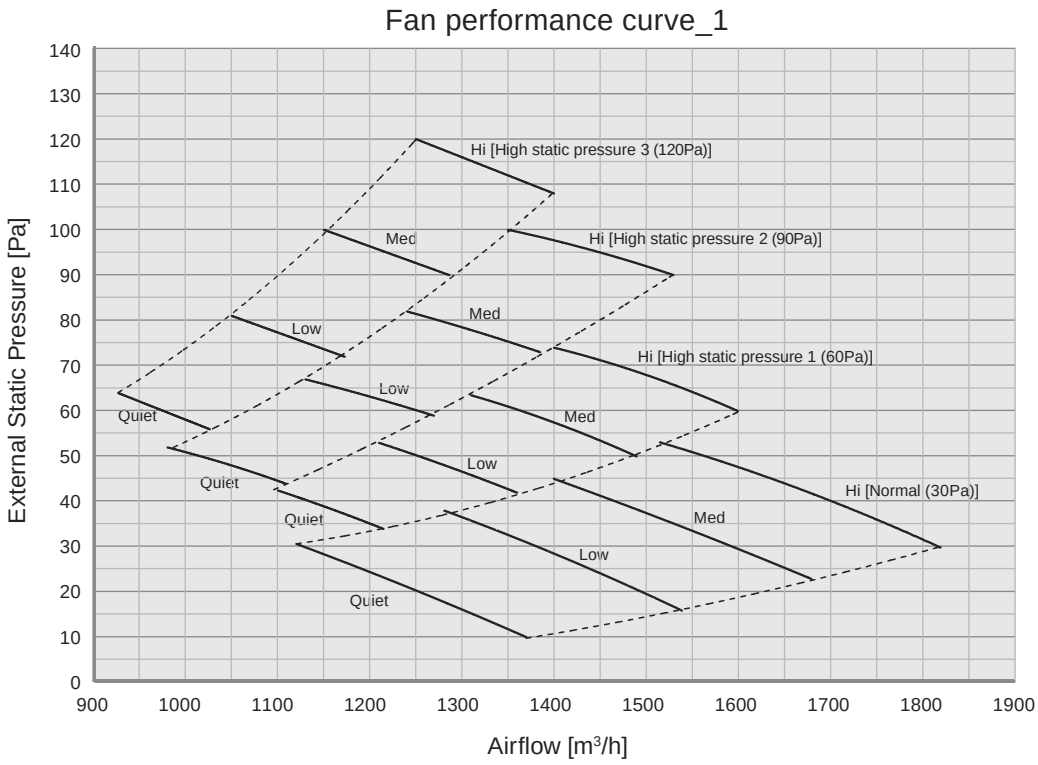

Fan performance curve_2
(For function setting by remote controller)

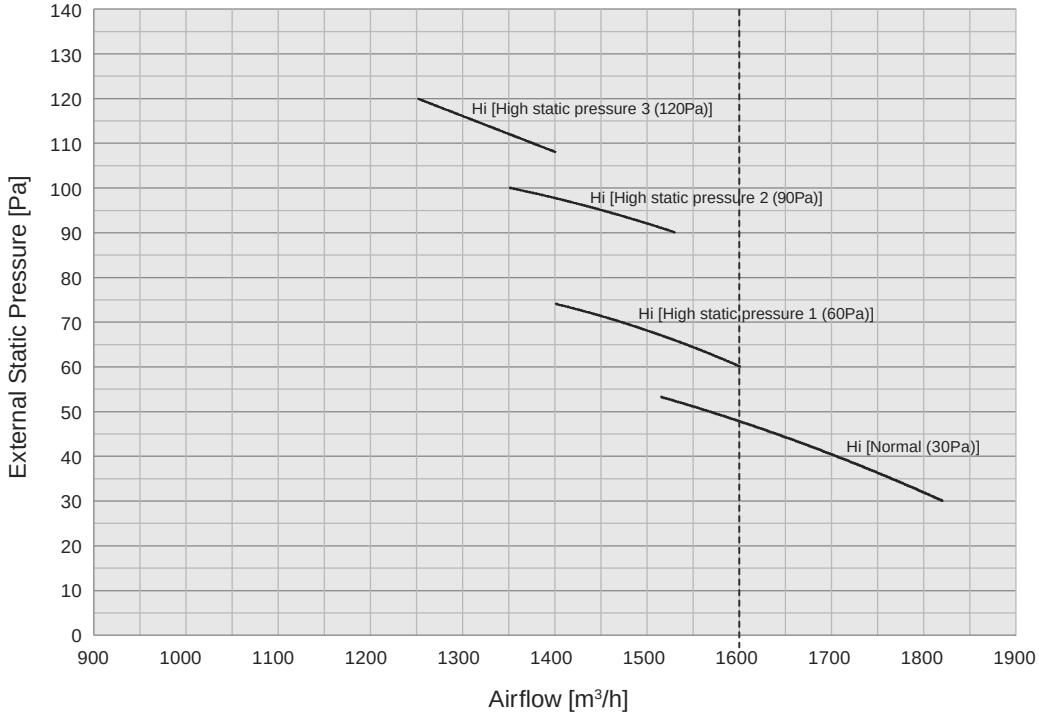

NOTES:

- Setting of the external static pressure is switchable into 4-stage modes by using the remote controller.
- According to the resistance of the connecting duct, perform the setting of the external static pressure with referring “Fan performance curve_2” above.
- The default setting is set at "Normal mode".

■ Characteristics of air volume and capacity

● Cooling

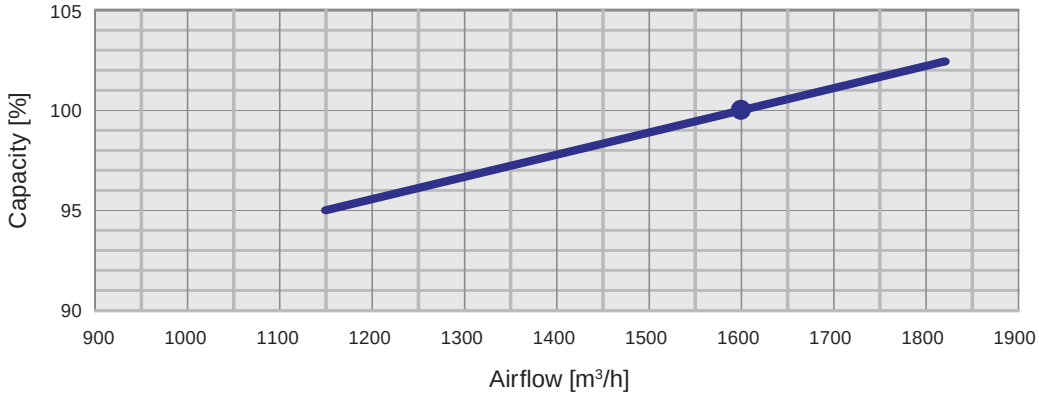

■ Model: ARGA36FMTA

Fan speed	Item		Static pressure mode							
			Mode 1		Mode 2		Mode 3		Mode 4	
			Low static pressure		Normal		High static pressure 1		High static pressure 2	
HIGH	Static pressure	Pa	30	45	60	75	90	105	115	120
	Airflow	m^3/h	2000	1780	2000	1790	2000	1680	1760	1700
		l/s	556	494	556	497	556	467	489	472
		CFM	1176	1047	1176	1053	1176	988	1035	1000
MED	Static pressure	Pa	28	42	50	61	74	87	99	102
	Airflow	m^3/h	1920	1710	1850	1650	1810	1530	1630	1580
		l/s	533	475	514	458	503	425	453	439
		CFM	1129	1006	1088	971	1065	900	959	929
LOW	Static pressure	Pa	24	35	38	47	63	74	83	86
	Airflow	m^3/h	1790	1610	1650	1440	1670	1420	1490	1450
		l/s	497	447	458	400	464	394	414	403
		CFM	1053	947	971	847	982	835	876	853
QUIET	Static pressure	Pa	19	28	32	39	50	60	60	63
	Airflow	m^3/h	1610	1440	1510	1310	1490	1280	1280	1230
		l/s	447	400	419	364	414	356	356	342
		CFM	947	847	888	771	876	753	753	724

Factory setting is Mode 2.

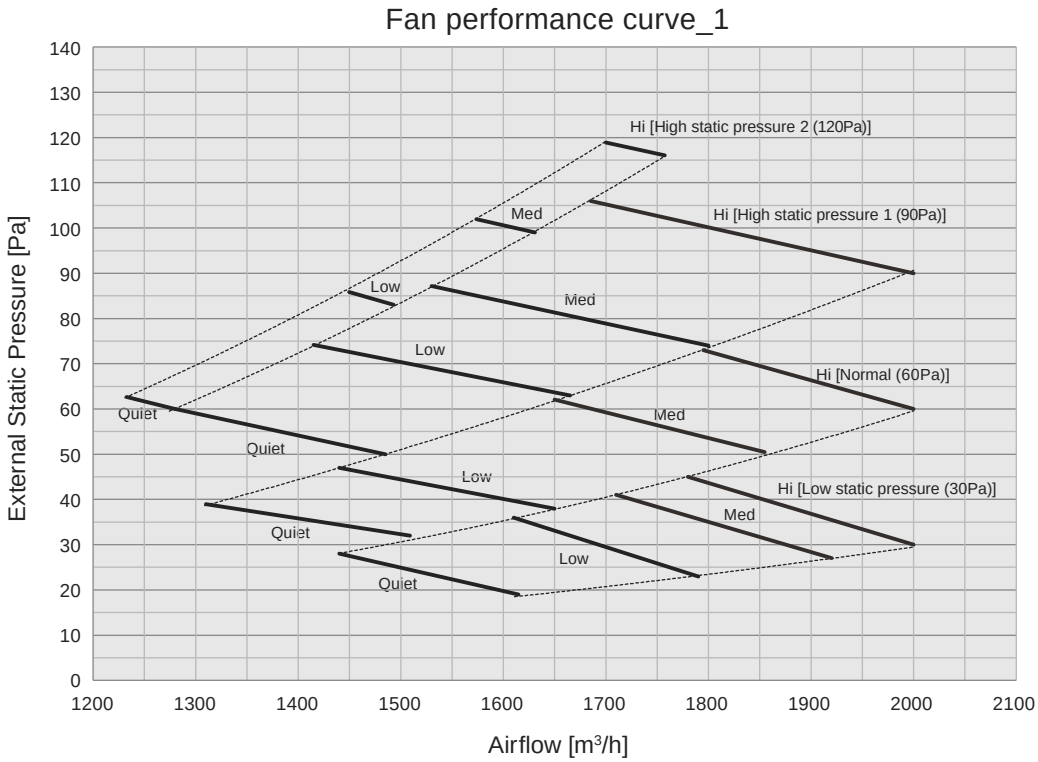

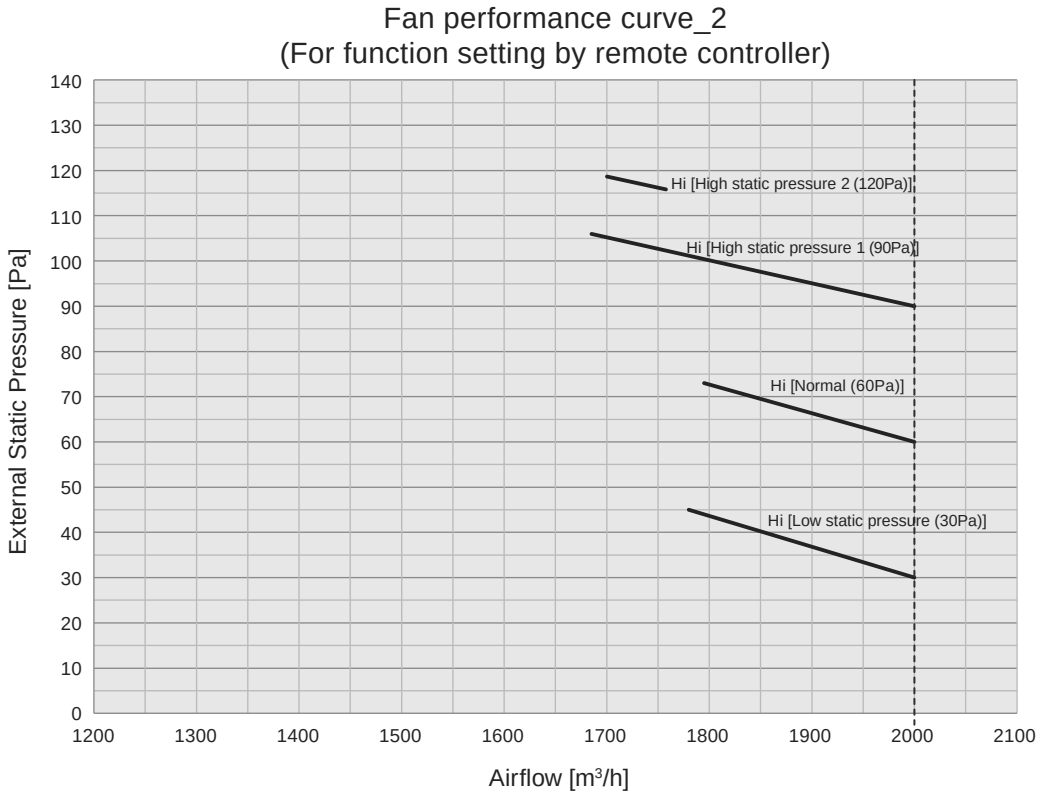

NOTES:

- Setting of the external static pressure is switchable into 4-stage modes by using the remote controller.
- According to the resistance of the connecting duct, perform the setting of the external static pressure with referring “Fan performance curve_2” above.
- The default setting is set at "Normal mode".

■ Characteristics of air volume and capacity

● Cooling

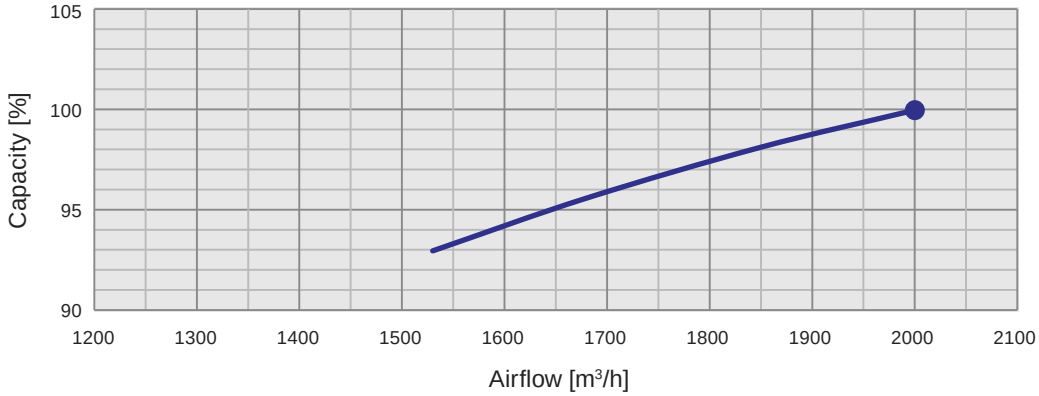

■ Model: ARGA45FMTA

Fan speed	Item		Static pressure mode							
			Mode 1		Mode 2		Mode 3		Mode 4	
			Low static pressure		Normal		High static pressure 1		High static pressure 2	
HIGH	Static pressure	Pa	30	45	60	75	90	110	110	120
	Airflow	m^3/h	2500	2210	2500	2210	2380	2080	2100	1990
		l/s	694	614	694	614	661	578	583	553
		CFM	1471	1300	1471	1300	1400	1224	1235	1171
MED	Static pressure	Pa	27	39	50	68	76	94	94	99
	Airflow	m^3/h	2340	2060	2380	2060	2200	1910	1910	1830
		l/s	650	572	661	572	611	531	531	508
		CFM	1376	1212	1400	1212	1294	1124	1124	1076
LOW	Static pressure	Pa	23	33	44	58	65	78	78	83
	Airflow	m^3/h	2160	1910	2190	1900	2020	1740	1740	1670
		l/s	600	531	608	528	561	483	483	464
		CFM	1271	1124	1288	1118	1188	1024	1024	982
QUIET	Static pressure	Pa	18	28	36	48	48	58	62	66
	Airflow	m^3/h	2000	1760	2000	1730	1730	1500	1550	1490
		l/s	556	489	556	481	481	417	431	414
		CFM	1176	1035	1176	1018	1018	882	912	876

Factory setting is Mode 2.

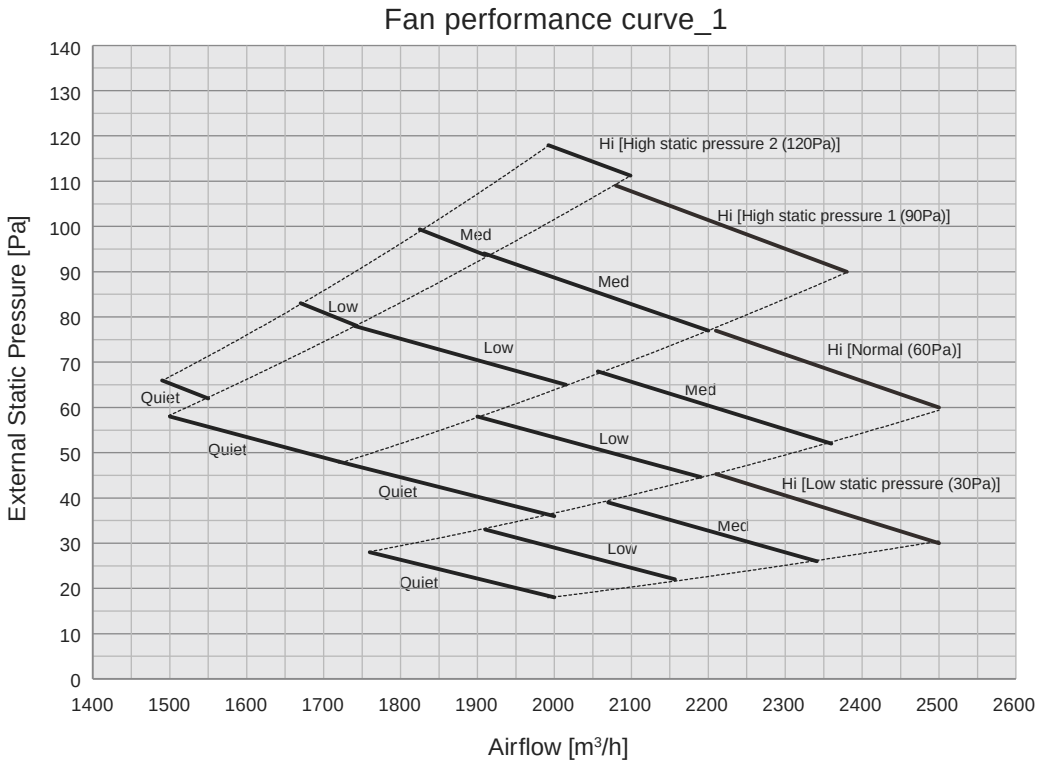

Fan performance curve_2
(For function setting by remote controller)

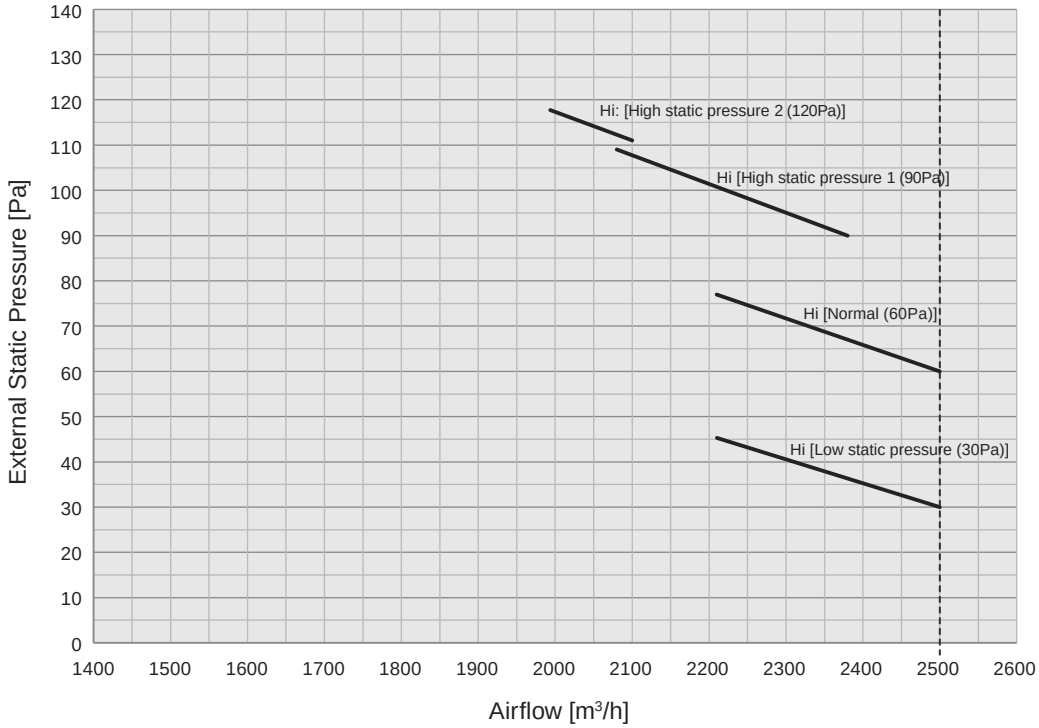

NOTES:

- Setting of the external static pressure is switchable into 4-stage modes by using the remote controller.
- According to the resistance of the connecting duct, perform the setting of the external static pressure with referring “Fan performance curve_2” above.
- The default setting is set at "Normal mode".

■ Characteristics of air volume and capacity

● Cooling

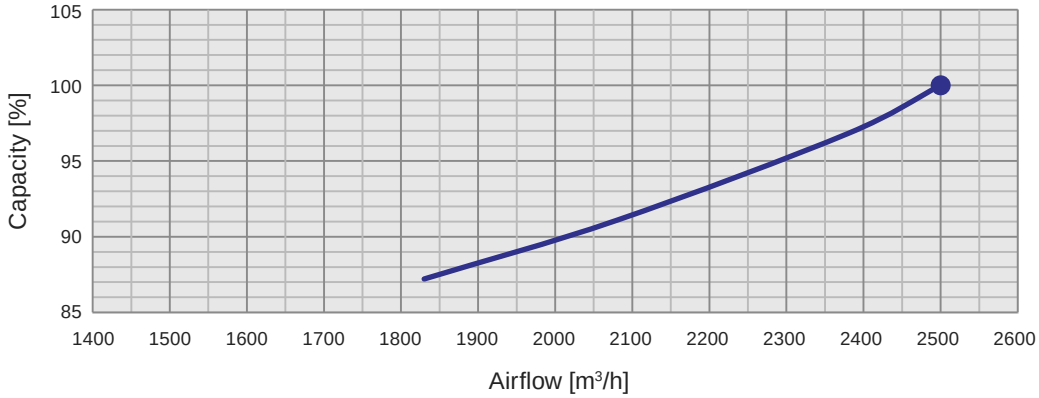

■ Model: ARGA60FHTA

Fan speed	Item		Static pressure mode							
			Mode 1		Mode 2		Mode 3		Mode 4	
			Normal		High static pressure 1		High static pressure 2		High static pressure 3	
HIGH	Static pressure	Pa	60	85	100	120	130	145	150	160
	Airflow	m^3/h	3350	2860	3060	2780	2900	2700	2760	2620
		l/s	931	794	850	772	806	750	767	728
		CFM	1971	1682	1800	1635	1706	1588	1624	1541
MED	Static pressure	Pa	50	77	85	103	115	127	130	138
	Airflow	m^3/h	3170	2700	2820	2580	2720	2530	2550	2430
		l/s	881	750	783	717	756	703	708	675
		CFM	1865	1588	1659	1518	1600	1488	1500	1429
LOW	Static pressure	Pa	45	70	67	86	97	110	115	123
	Airflow	m^3/h	2950	2550	2580	2370	2520	2370	2410	2300
		l/s	819	708	717	658	700	658	669	639
		CFM	1735	1500	1518	1394	1482	1394	1418	1353
QUIET	Static pressure	Pa	37	55	57	67	85	96	95	101
	Airflow	m^3/h	2650	2270	2370	2130	2340	2210	2190	2100
		l/s	736	631	658	592	650	614	608	583
		CFM	1559	1335	1394	1253	1376	1300	1288	1235

Factory setting is Mode 1.

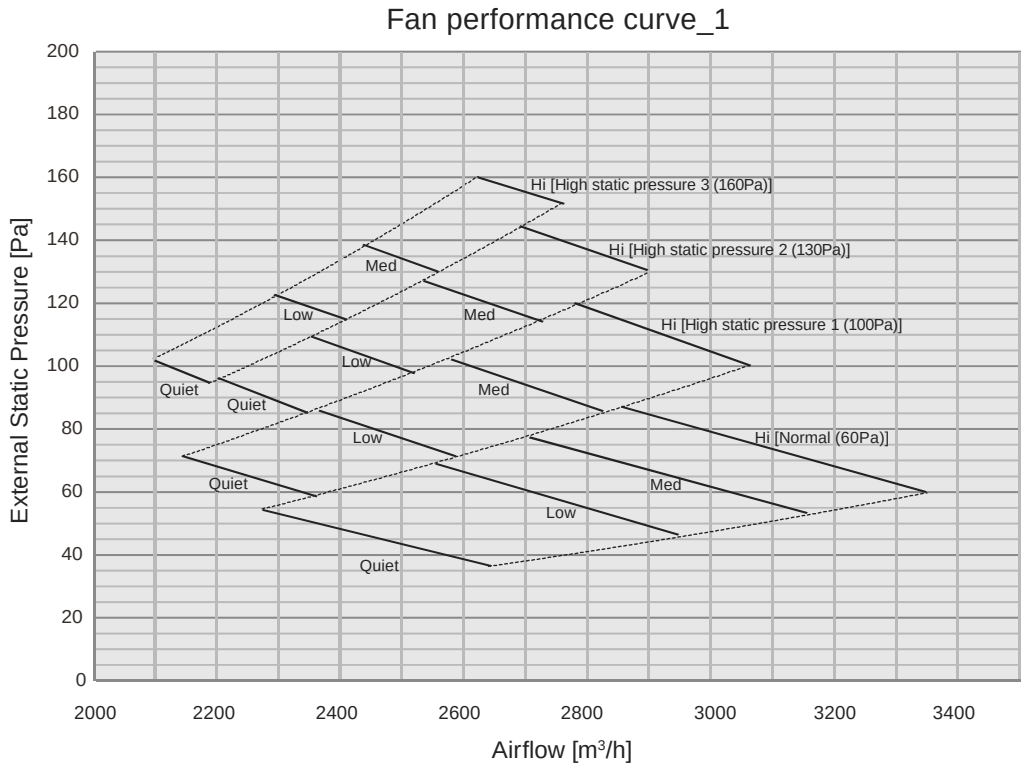

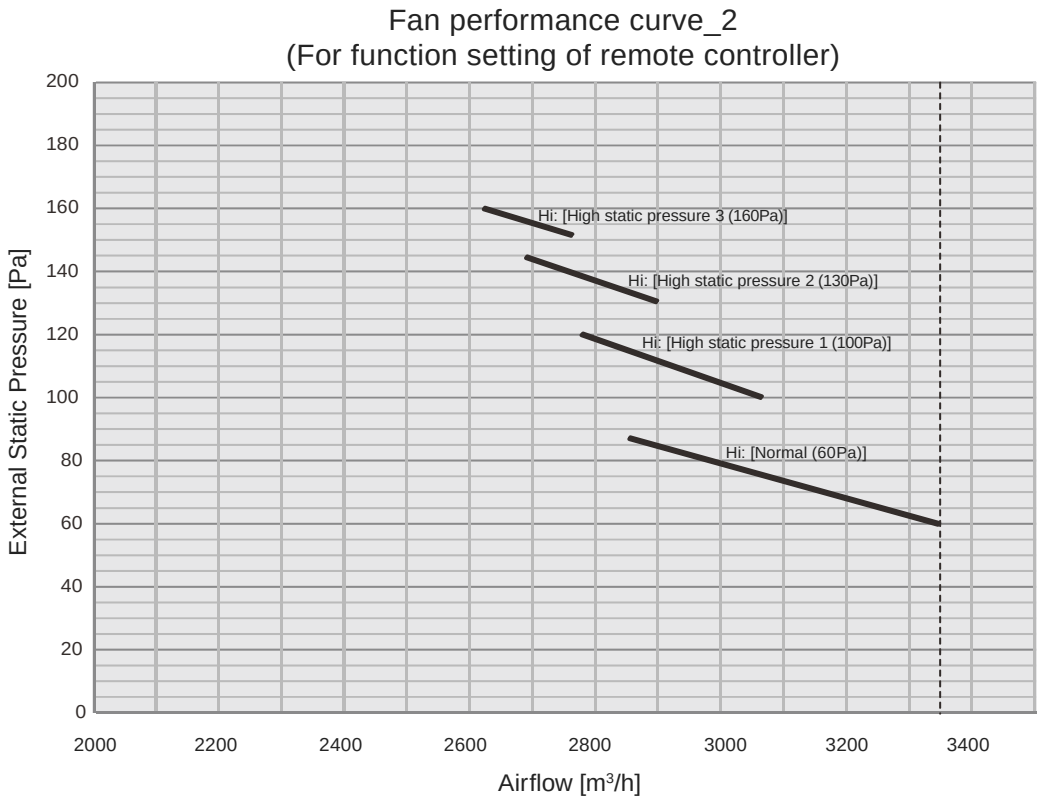

NOTES:

- Setting of the external static pressure is switchable into 4-stage modes by using the remote controller.
- According to the resistance of the connecting duct, perform the setting of the external static pressure with referring “Fan performance curve_2” above.
- The default setting is set at "Normal mode".

■ Characteristics of air volume and capacity

● Cooling

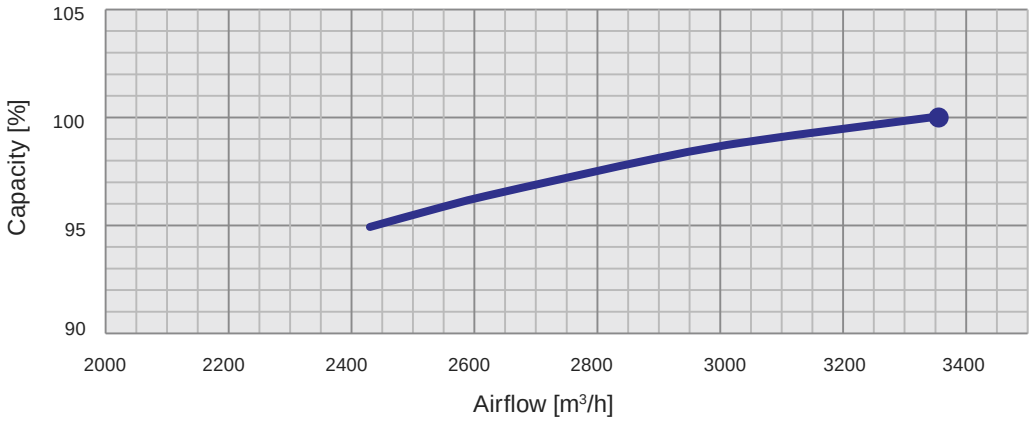

8. Operation noise (sound pressure)

8-1. Noise level curve

■ Model: ARGA30FMTA

● Cooling

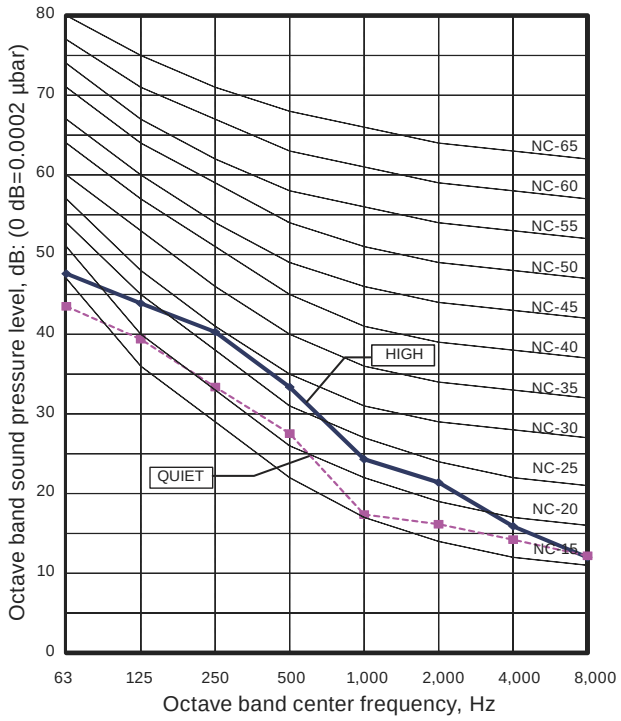

■ Model: ARGA36FMTA

● Cooling

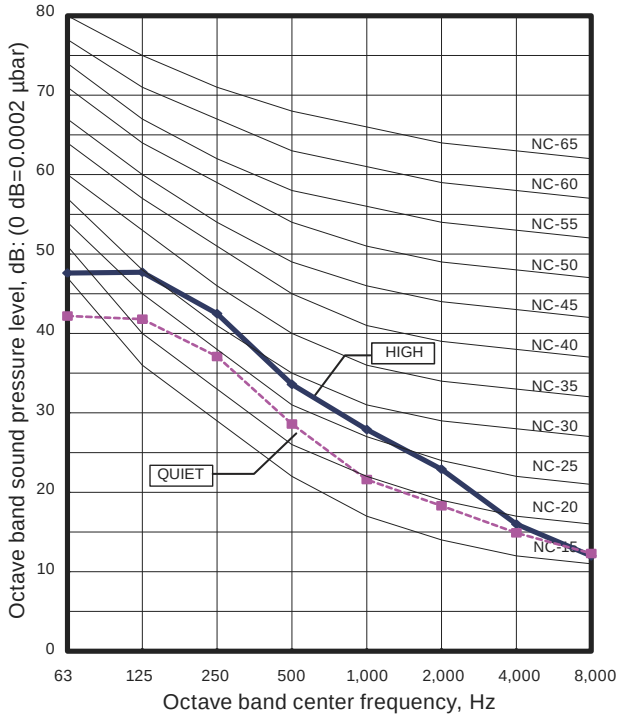

■ Model: ARGA45FMTA

● Cooling

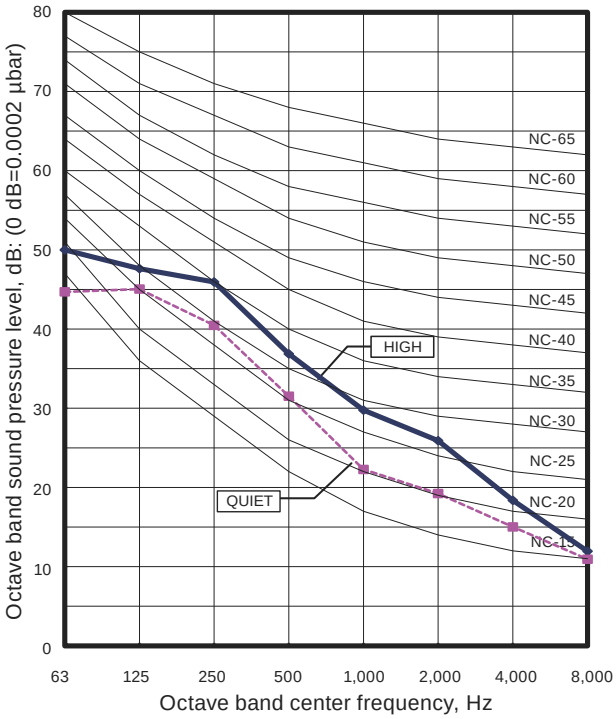

■ Model: ARGA60FHTA

● Cooling

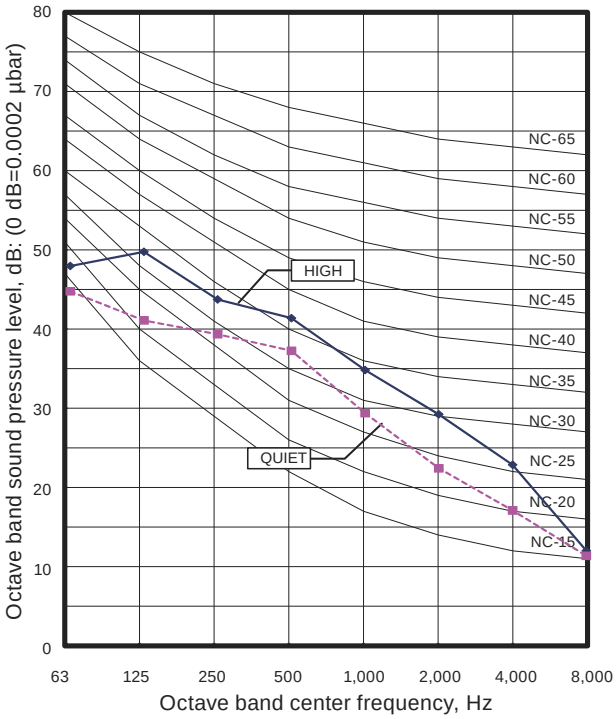

8-2. Sound level check point

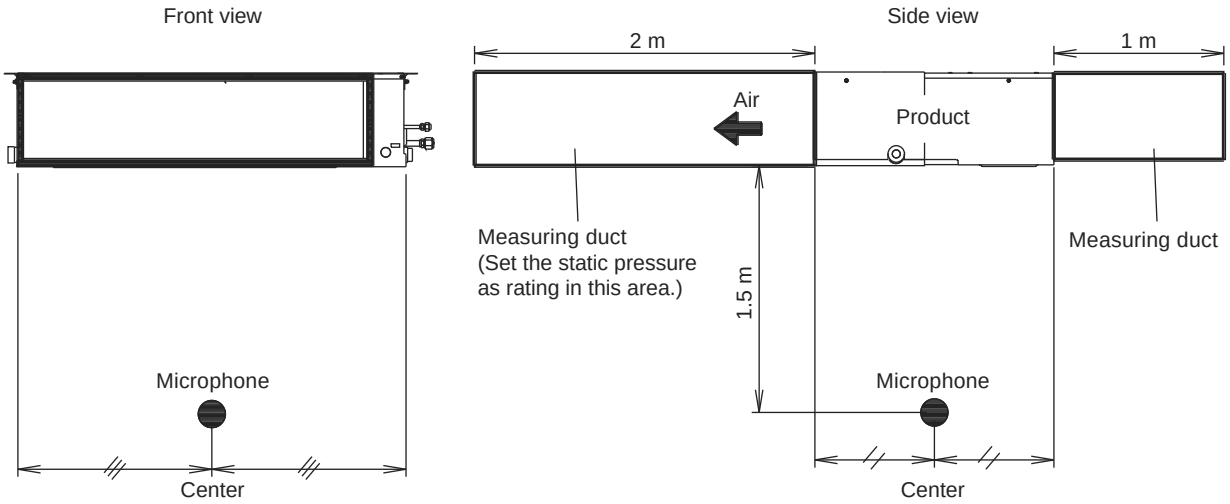

9. Safety devices

	Protection form		Model	
			ARGA30FMTA ARGA36FMTA ARGA45FMTA	**ARGA60FHTA**
Circuit protection	Current fuse (PCB*)		250 V, 5 A	
Fan motor protection	Thermal protection program	Activate	115 ± 15 °C Fan motor stop	—
		Reset	70 °C Fan motor restart	—
	Current protection	Activate	—	7.9 A Fan motor stop

*: Printed Circuit Board

10. External input and output

With using external input and output functions, this product can be operated inter-connectedly with an external device.

■ Models: ARGA30FMTA, ARGA36FMTA, and ARGA45FMTA

Connector	Input	Output	Remarks
CN102	Control input	—	See external input/output settings for details.
CN103	—	Operation status output	
CN6	—	Fresh-air control output	

■ Model: ARGA60FHTA

Connector	Input	Output	Remarks
CN46	Control input	—	See external input/output settings for details.
* CN47	—	Operation status output	
	—	Error status output	
	—	Fresh-air control output	

*: Any one of the output functions can be selected by function setting No.60.

10-1. Control input (Operation/Stop or Forced stop)

The air conditioner can be remotely operated by means of the following on-site work.
"Operation/Stop" mode or "Forced stop" mode can be selected with function setting of indoor unit.
Unit operation is started at the following contents by adding the contact input of a commercial on/off switch to a connector on the external control PCB and turning it on.

Unit operation	Initial setting after power is on	Starting mode other than initial setting
Operation mode	Auto changeover	Mode at previous operation
Set temperature	24 °C	Temperature at previous operation
Airflow mode	AUTO	Mode at previous operation
Air direction (swing)	Standard air direction (swing OFF)	Air direction at previous operation

● Circuit diagram example

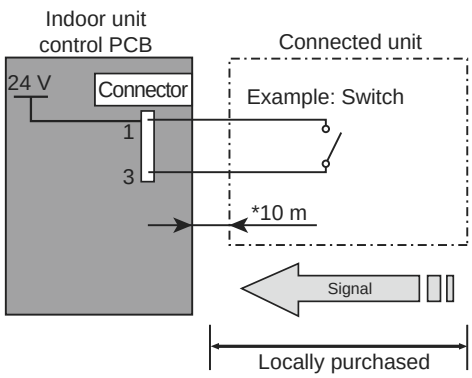

- Contact capacity: DC 24 V or more, 10 mA or more.
- *: Make the distance from the PCB to the connected unit within 10 m.
- Use non-polar relays and switches.

- When function setting is in "Operation/Stop" mode

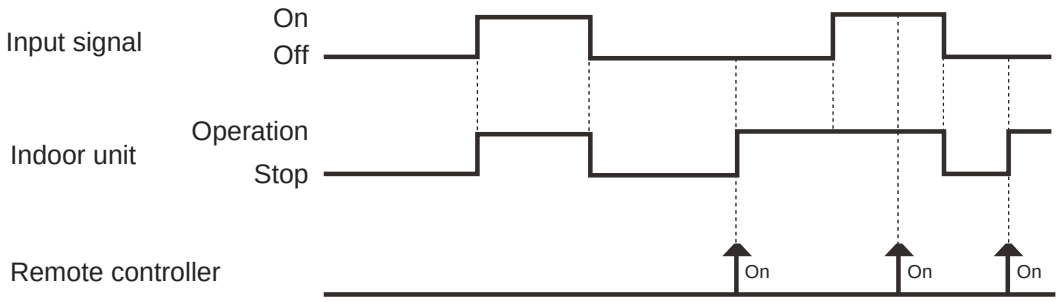

- When function setting is in "Forced stop" mode

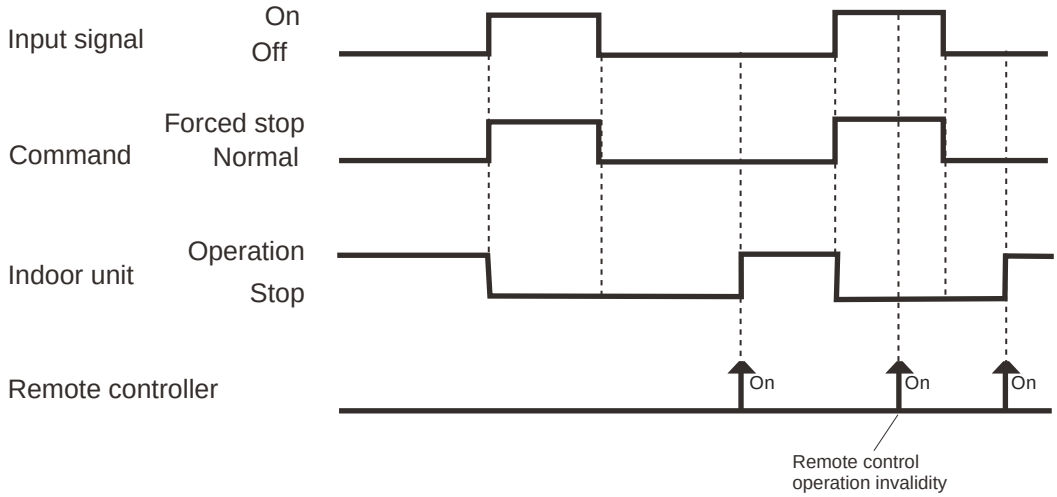

● Optional part

Model name	Exterior
UTD-ECS5A	External input wire 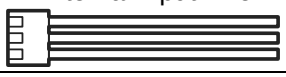

10-2. External output

With using external output function, operating status of this product can be transmitted to the external device, and also, this product can be inter-connected with the external device.

■ Operation status output

● Circuit diagram example

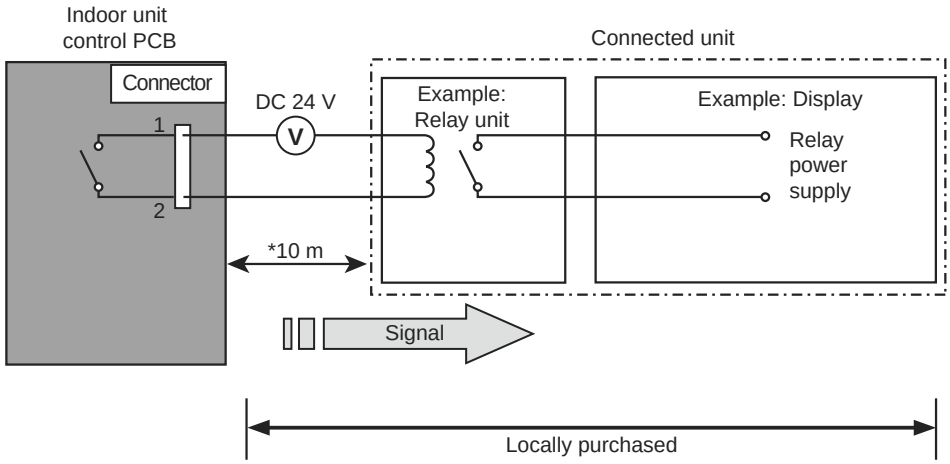

- *: Make the distance from the PCB to the connected unit within 10 m.
- Relay spec: Max. DC 24 V, 10 mA to less than 500 mA.

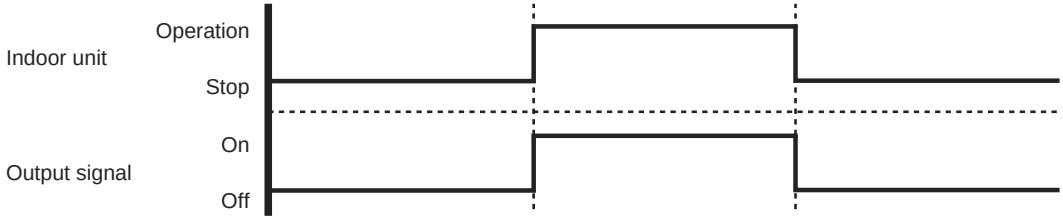

● Optional part

Model name	Exterior
UTD-ECS5A	External output wire For 30,36,45 models  For 60 model 

■ Error status output

● Circuit diagram example

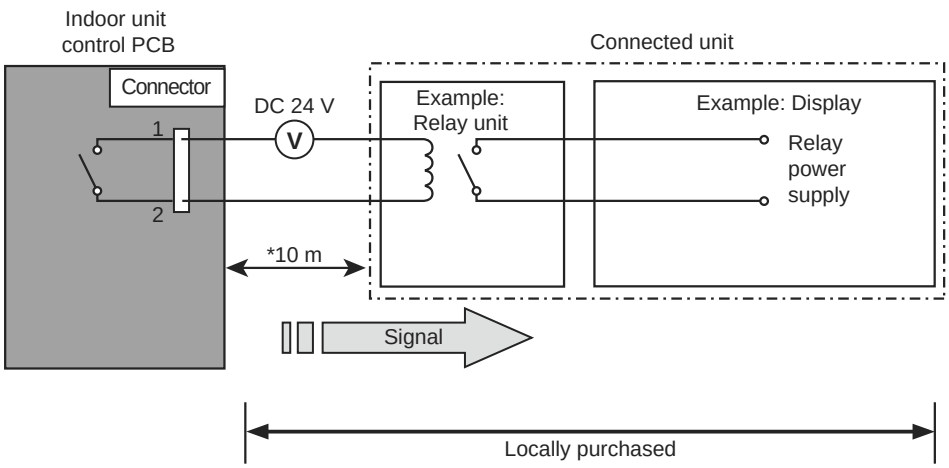

*: Make the distance from the PCB to the connected unit within 10 m.
Relay spec: Max. DC 24 V, 10 mA to less than 500 mA.

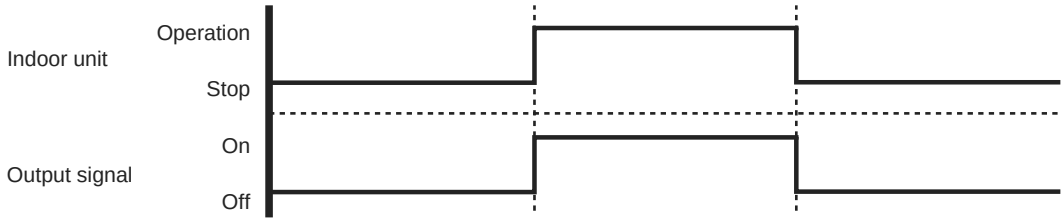

● Optional part

Model name	Exterior
UTD-ECS5A	External output wire 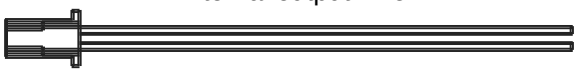

■ Fresh-air control output

Signal linked to the indoor unit fan on can be output.

NOTE: In cold-air prevention control operation, the signal becomes off.

● Circuit diagram example

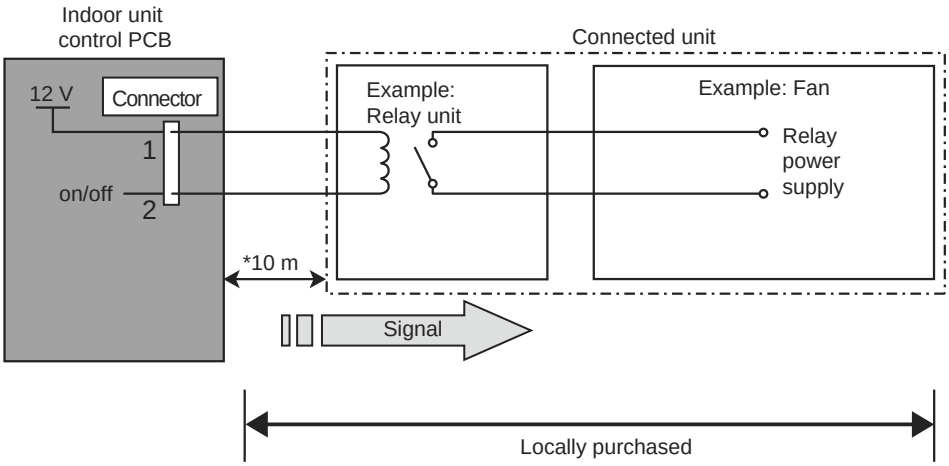

- *: Make the distance from the PCB to the connected unit within 10 m.
- Relay spec: Rated DC 12 V, 50 mA or less.

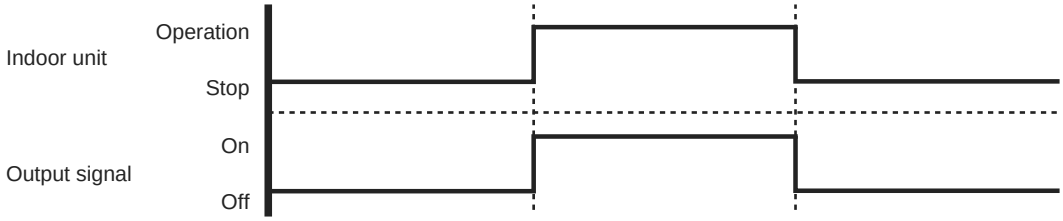

● Optional part

Model name	Exterior
UTD-ECS5A	Fresh-air output wire 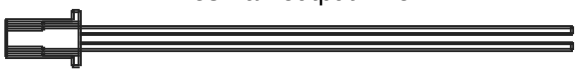

11. Function settings

To adjust the functions of this product according to the installation environment, various types of function settings are available.

NOTE: Incorrect settings can cause a product malfunction.

11-1. Function settings on indoor unit

By using some components on the PCB, you can change the function settings.

■ Models: ARGA30FMTA, ARGA36FMTA, and ARGA45FMTA

By using some components on the PCB, you can change the function settings.

Related components on the PCB and the applicable settings

Component		Setting content
DIP switch	1	Remote controller address setting
	2	
	3	
	4	
Jumper wire	JM1	Setting change prohibited
	JM2	Setting change prohibited
	JM3	Setting change prohibited

● Component location

Components on the indoor unit main PCB used for the function settings are located as shown in the following figure.

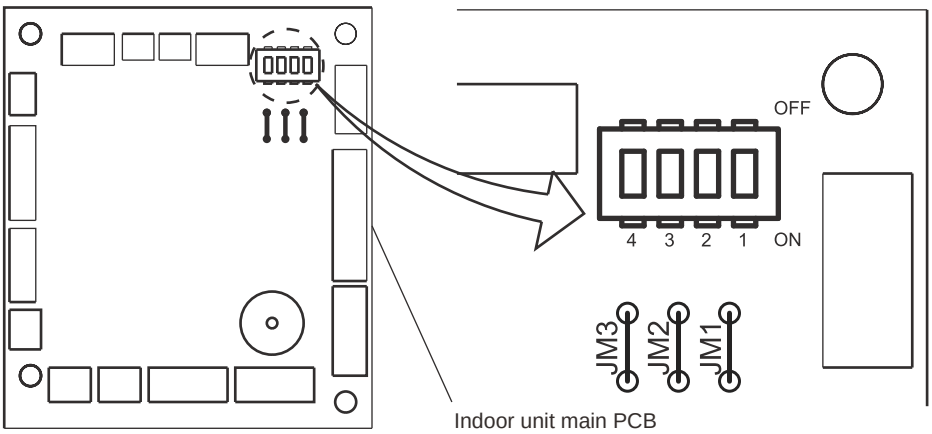

● DIP switch setting

Remote controller address setting

When operating a number of indoor units by using a wired remote controller, DIP switch setting for assigning unit number to each indoor unit is required.
DIP switches are normally set to make the unit number 00.

Remote controller address	DIP switch number				Factory setting
	1	2	3	4	
00	OFF	OFF	OFF	OFF	♦
01	ON	OFF	OFF	OFF	
02	OFF	ON	OFF	OFF	
03	ON	ON	OFF	OFF	
04	OFF	OFF	ON	OFF	
05	ON	OFF	ON	OFF	
06	OFF	ON	ON	OFF	
07	ON	ON	ON	OFF	
08	OFF	OFF	OFF	ON	
09	ON	OFF	OFF	ON	
10	OFF	ON	OFF	ON	
11	ON	ON	OFF	ON	
12	OFF	OFF	ON	ON	
13	ON	OFF	ON	ON	
14	OFF	ON	ON	ON	
15	ON	ON	ON	ON	

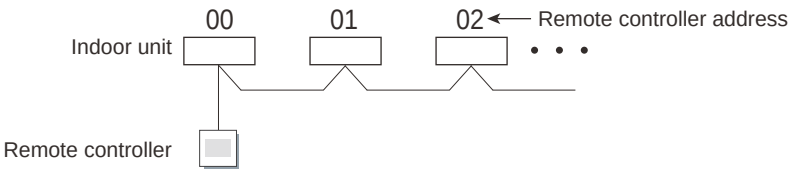

● Jumper wire setting

- **JM1: Setting change prohibited**
- **JM2: Setting change prohibited**
- **JM3: Setting change prohibited**

■ Model: ARGA60FHTA

By using some components on the PCB, you can change the function settings.

Related components on the PCB and the applicable settings

● Component location

Components on the indoor unit main PCB used for the function settings are located as shown in the following figure.

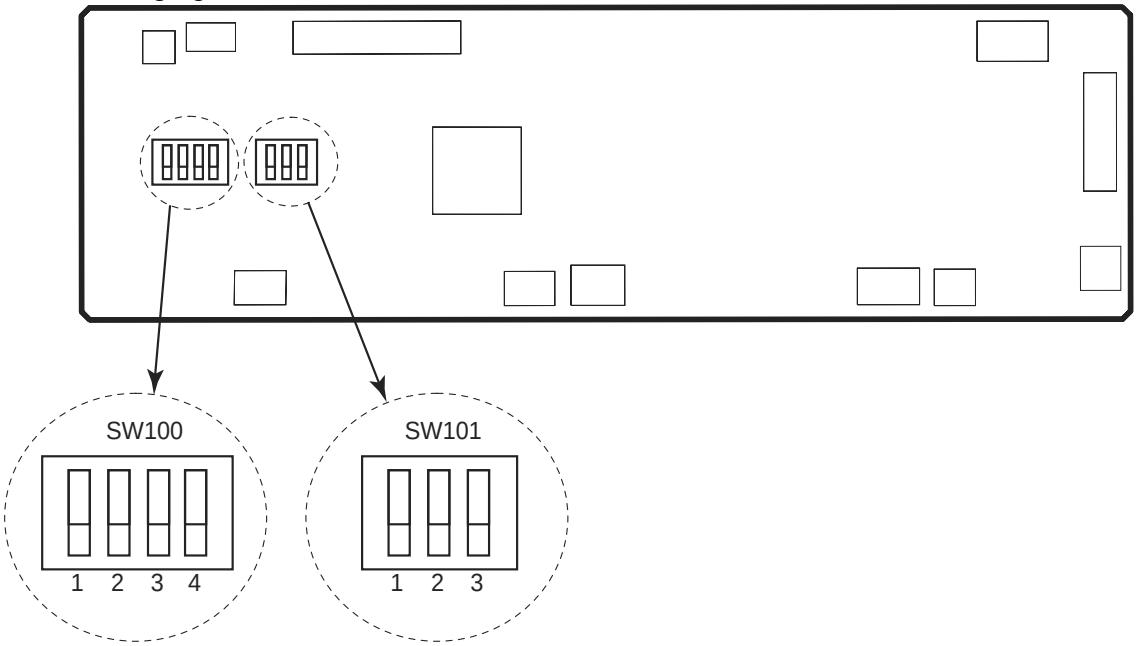

● DIP switch setting

- **Remote controller address setting (SW100)**
  When operating a number of indoor units by using a wired remote controller, DIP switch setting for assigning unit number to each indoor unit is required.
  DIP switches are normally set to make the unit number 00.

Remote controller address	DIP switch number				Factory setting
	1	2	3	4	
00	OFF	OFF	OFF	OFF	♦
01	ON	OFF	OFF	OFF	
02	OFF	ON	OFF	OFF	
03	ON	ON	OFF	OFF	
04	OFF	OFF	ON	OFF	
05	ON	OFF	ON	OFF	
06	OFF	ON	ON	OFF	
07	ON	ON	ON	OFF	
08	OFF	OFF	OFF	ON	
09	ON	OFF	OFF	ON	
10	OFF	ON	OFF	ON	
11	ON	ON	OFF	ON	
12	OFF	OFF	ON	ON	
13	ON	OFF	ON	ON	
14	OFF	ON	ON	ON	
15	ON	ON	ON	ON	

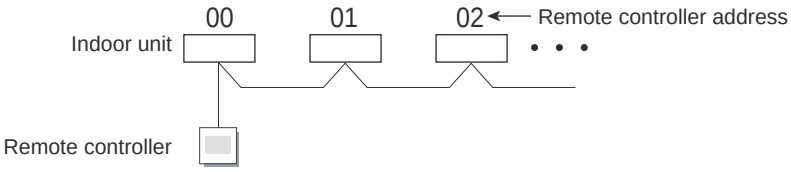

- **Switch 1: Setting change prohibited (SW101)**
- **Switch 2: Setting change prohibited (SW101)**
- **Switch 3: Setting change prohibited (SW101)**

11-2. Function settings by using remote controller

Some function settings can be changed on the remote controller. After confirming the setting procedure and the content of each function setting, select appropriate functions for your installation environment.

NOTE: Incorrect settings can cause a product malfunction.

■ Setting procedure by using wired remote controller

The function number and the associated setting value are displayed on the LCD of the remote controller. Follow the instructions written in the local setup procedure supplied with the remote controller, and select appropriate setting according to the installation environment.

Before turning on the power of the indoor unit, reconfirm following items:

- Piping air tight test and vacuuming have been performed firmly.
- There is no wiring mistake.

1. Turn on the power.
2. Press the SET TEMP. buttons (∨) (∧) and FAN button simultaneously for more than 5 seconds to enter the function setting mode.

3. Press the SET BACK button to select the indoor unit number when you set the remote controller address setting.

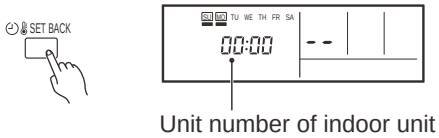

4. Press the set time buttons to select the function number.

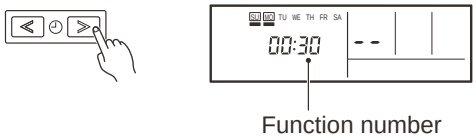

5. Press the SET TEMP. buttons (∨) (∧) to select the setting value. The display flashes during setting value selection.

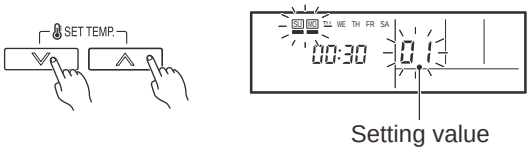

6. Press the TIMER SET button to confirm the setting. Press the TIMER SET button for a few seconds until the setting value stops flashing. If the setting value display changes or if “- -” is displayed when the flashing stops, the setting value has not been set correctly. (An invalid setting value may have been selected for the indoor unit.)

7. Repeat steps 3 to 6 to perform additional settings. Press the SET TEMP. buttons (∨) (∧) and FAN button simultaneously again for more than 5 seconds to cancel the function setting mode. In addition, the function setting mode will be automatically canceled after 1 minute if no operation is performed.
8. After completing the function setting, be sure to turn off the power and turn it on again.

⚠CAUTION

After turning off the power, wait 30 seconds or more before turning on the power again. The function setting will not become active unless the power is turned off then on again.

■ Contents of function setting

Each function setting listed in this section is adjustable in accordance with the installation environment.

NOTE: Setting will not be changed if invalid numbers or setting values are selected.

	Function no.	Functions
1)	11	Filter sign
2)	21	Static pressure
3)	30	Room temperature sensor control for cooling
4)	40	Auto restart
5)	42	Room temperature sensor switching
6)	46	External input control
7)	48	Room temperature sensor switching (Aux.)
8)	60	Switching functions for external output terminal

1) Filter sign

Select appropriate intervals for displaying the filter sign on the indoor unit according to the estimated amount of dust in the air of the room.

If the indication is not required, select "No indication" (03).

Function number	Setting value	Setting description	Factory setting
11	00	Standard (2,500 hours)	
	01	Long interval (4,400 hours)	
	02	Short interval (1,250 hours)	
	03	No indication	♦

2) Static pressure

Select the appropriate static pressure according to the installation conditions.

For 30 model

Function number	Setting value	Setting description	Factory setting
21	00	Normal (30 Pa)	♦
	01	High static pressure 1 (60 Pa)	
	02	High static pressure 2 (90 Pa)	
	03	High static pressure 3 (120 Pa)	

For 36, 45 model

Function number	Setting value	Setting description	Factory setting
21	00	Normal (60 Pa)	♦
	01	Low static pressure (30 Pa)	
	02	High static pressure 1 (90 Pa)	
	03	High static pressure 2 (120 Pa)	

For 60 model

Function number	Setting value	Setting description	Factory setting
21	00	Normal (60P a)	♦
	02	High static pressure 1 (100 Pa)	
	03	High static pressure 2 (130 Pa)	
	04	High static pressure 3 (160 Pa)	

3) Room temperature sensor control for cooling

Depending on the installed environment, correction of the room temperature sensor may be required. Select the appropriate control setting according to the installed environment.

Function number	Setting value	Setting description	Factory setting
30	00	Standard	♦
	01	Lower control	
	02	Slightly higher control	
	03	Higher control	

4) Auto restart

Enables or disables automatic restart after a power interruption.

Function number	Setting value	Setting description	Factory setting
40	00	Enable	♦
	01	Disable	

NOTE: Auto restart is an emergency function such as for power outage etc. Do not attempt to use this function in normal operation. Be sure to operate the unit by remote controller or external device.

5) Room temperature sensor switching

(Only for wired remote controller)

When using the wired remote controller temperature sensor, change the setting to "Both" (01).

Function number	Setting value	Setting description	Factory setting
42	00	Indoor unit	♦
	01	Both	

00: Sensor on the indoor unit is active.

01: Sensors on both indoor unit and wired remote controller are active.

NOTE: Remote controller sensor must be turned on by using the remote controller.

6) External input control

"Operation/Stop" mode or "Forced stop" mode can be selected.

Function number	Setting value	Setting description	Factory setting
46	00	Operation/Stop mode	♦
	01	(Setting prohibited)	
	02	Forced stop mode	

7) Room temperature sensor switching (Aux.)

To use the temperature sensor on the wired remote controller only, change the setting to "Wired remote controller" (01).

This function will only work if the function setting 42 is set at "Both" (01).

Function number	Setting value	Setting description	Factory setting
48	00	Both	♦
	01	Wired remote controller	

8) Switching functions for external output terminal

Functions of the external output terminal can be switched. For details, refer to “External input and output”.

Only for 60 model

Function number	Setting value	Setting description	Factory setting
60	00	Operation status	♦
	09	Error status	
	10	Indoor unit fan operation status	

11-3. Function settings on wired remote controller

By using some components on the wired remote controller, you can change the function settings related on the remote controller.

■ Component location

Components on the wired remote controller used for the function settings are located as shown in the following figure.

NOTE: Do not use DIP switch 2.

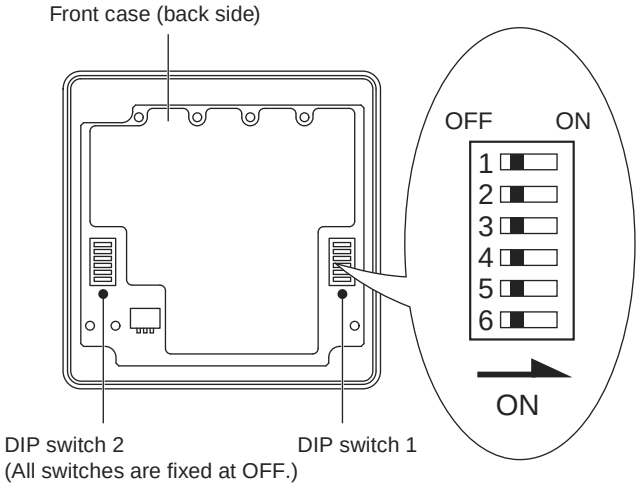

■ DIP switch setting

By switching each slide switch on the DIP switch 1, you can change the function settings for the remote controller.

DIP switch 1	SW1	Setting change prohibited*
	SW2	Setting change prohibited*
	SW3	Setting change prohibited*
	SW4	Setting change prohibited*
	SW5	Setting change prohibited*
	SW6	Memory backup setting

*: Switches are fixed at OFF initially.

- **SW6: Memory backup setting**
  Set to ON to use the batteries for memory backup. If the batteries are not used, all of the settings stored in the memory will be deleted if there is power failure.

  NOTE: In case of simple remote controller, do not turn it on.

SW6	Memory backup	Factory setting
OFF	Disabled	♦
ON	Enabled	

12. Optional parts

12-1. Others

Exterior	Part name	Model name	Summary
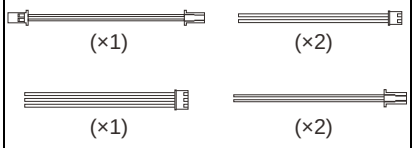	External control set	UTD-ECS5A	Use to connect with various peripheral devices and air conditioner PCB. (Set of 6)
	Remote sensor unit	UTY-XSZX	New amenity space can be offered by installing Remote sensor unit in the remote controller.
	Long-life filter	UTD-LFNB	Long-life filter can be mounted to the indoor unit. (For 30 model)
	Long-life filter	UTD-LFNA	Long-life filter can be mounted to the indoor unit. (For 36 and 45 models)
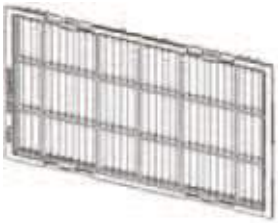	Long-life filter	UTD-LFKA	Long-life filter can be mounted to the indoor unit. (For 60 model)
	Drain pump unit	UTZ-PX1NAA	Optional drain lift up mechanism allows more flexible installation.

Part 2. OUTDOOR UNIT

SINGLE TYPE:
AOGA30FBTAS
AOGA36FRTAS
AOGA45FRTAS
AOGA60FRTAS

1. Specifications

Type				Cooling only
Model name				**AOGA30FBTAS**
Power supply				220—240 V ~ 50 Hz
Available voltage range				198—264 V
Starting current			A	60
Fan	Airflow rate	Cooling	m^3/h	4400—4400
	Type × Q'ty			Propeller × 1
	Motor output		W	95
Sound pressure level *1		Cooling	dB(A)	56—57
Heat exchanger type		Dimensions (H × W × D)	mm	main: 882 × 955 × 36.4sub: 882 × 570 × 18.2
		Fin pitch		1.45
		Rows × Stages		main: 2 × 42sub: 1 × 42
		Pipe type		Copper
		Fin	Type (Material)	Corrugate (Aluminum)
			Surface treatment	Corrosion resistance (Blue fin)
Compressor	Type × Q'ty			Scroll × 1
	Motor output		W	1950
Refrigerant		Type		R410A
		Factory charge	g	2500
Refrigerant oil		Type		POE
		Amount	cm^3	858
Enclosure		Material		Steel
		Color		Beige Approximate color of MUNSELL 10YR7.5/1.0
Dimensions (H × W × D)	Net		mm	914 × 970 × 370
	Gross			1048 × 1064 × 479
Weight	Net		kg	77
	Gross			85
Connection pipe	Size	Liquid	mm (in)	Ø 9.52 (Ø 3/8)
		Gas		Ø 15.88 (Ø 5/8)
	Method			Flare
	Pre-charge length		m	7.5
	Max. length			30
	Max. height difference			15
Operation range		Cooling	°C	21 to 52

NOTES:

- Specifications are based on the following conditions:
  - Cooling: Indoor temperature of 27 °CDB/19 °CWB, and outdoor temperature of 35 °CDB/24 °CWB.
  - Pipe length: 7.5 m, Height difference: 0 m.
- Protective function might work when using it outside the operation range.
- *1: Sound pressure level
  - Measured values in manufacturer's anechoic chamber.
  - Because of the surrounding sound environment, the sound levels measured in actual installation conditions might be higher than the specified values here.

Type				Cooling only		
Model name				**AOGA36FRTAS**	**AOGA45FRTAS**	**AOGA60FRTAS**
Power supply				3N 380—415 V ~ 50 Hz		
Available voltage range				342—457 V		
Starting current			A	43	47	67
Fan	Airflow rate	Cooling	m^3/h	5700—6100		
	Type × Q'ty			Propeller × 2		
	Motor output		W	70 × 2		
Sound pressure level *1		Cooling	dB(A)	56—57		
Heat exchanger type		Dimensions (H × W × D)	mm	1260 × 900 × 36.4		1260 × 900 × 39.9
		Fin pitch		1.30		
		Rows × Stages		2 × 60		3 × 60
		Pipe type		Copper		
		Fin	Type (Material)	Corrugate (Aluminum)		Flat (Aluminum)
			Surface treatment	Corrosion resistance (Blue fin)		
Compressor	Type × Q'ty			Scroll × 1		
	Motor output		W	2440	3190	3560
Refrigerant		Type		R410A		
		Factory charge	g	3400		4300
Refrigerant oil		Type		POE		
		Amount	cm^3	1242		
Enclosure		Material		Steel		
		Color		Beige Approximate color of MUNSELL 10YR7.5/1.0		
Dimensions (H × W × D)	Net		mm	1290 × 900 × 330		
	Gross			1430 × 1050 × 445		
Weight	Net		kg	100	102	107
	Gross			108	110	115
Connection pipe	Size	Liquid	mm (in)	Ø 9.52 (Ø 3/8)		
		Gas		Ø 19.05 (Ø 3/4)		
	Method			Flare		
	Pre-charge length		m	20		
	Max. length			50		
	Max. height difference			30		
Operation range		Cooling	°C	21 to 52		

NOTES:

- Specifications are based on the following conditions:
  - Cooling: Indoor temperature of 27 °CDB/19 °CWB, and outdoor temperature of 35 °CDB/24 °CWB.
  - Pipe length: 7.5 m, Height difference: 0 m.
- Protective function might work when using it outside the operation range.
- *1: Sound pressure level
  - Measured values in manufacturer's anechoic chamber.
  - Because of the surrounding sound environment, the sound levels measured in actual installation conditions might be higher than the specified values here.

2. Dimensions

2-1. Model: AOGA30FBTAS

Unit : mm

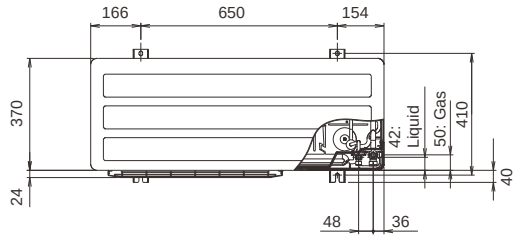

Top view

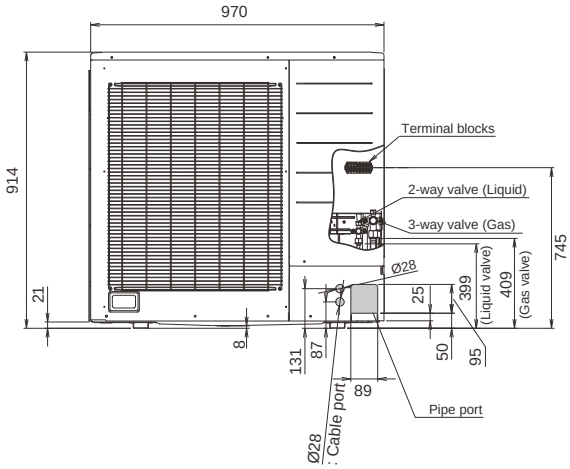

Front view

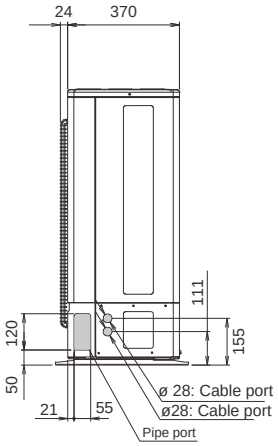

Side view

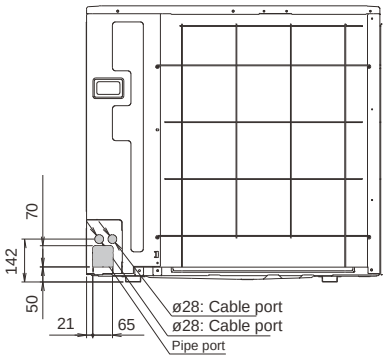

Rear view

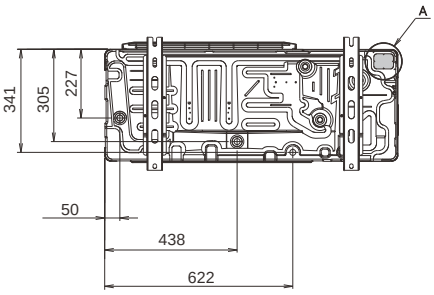

Bottom view

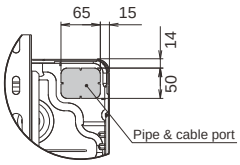

Detail A

2-2. Models: AOGA36FRTAS, AOGA45FRTAS, and AOGA60-FRTAS

Unit : mm

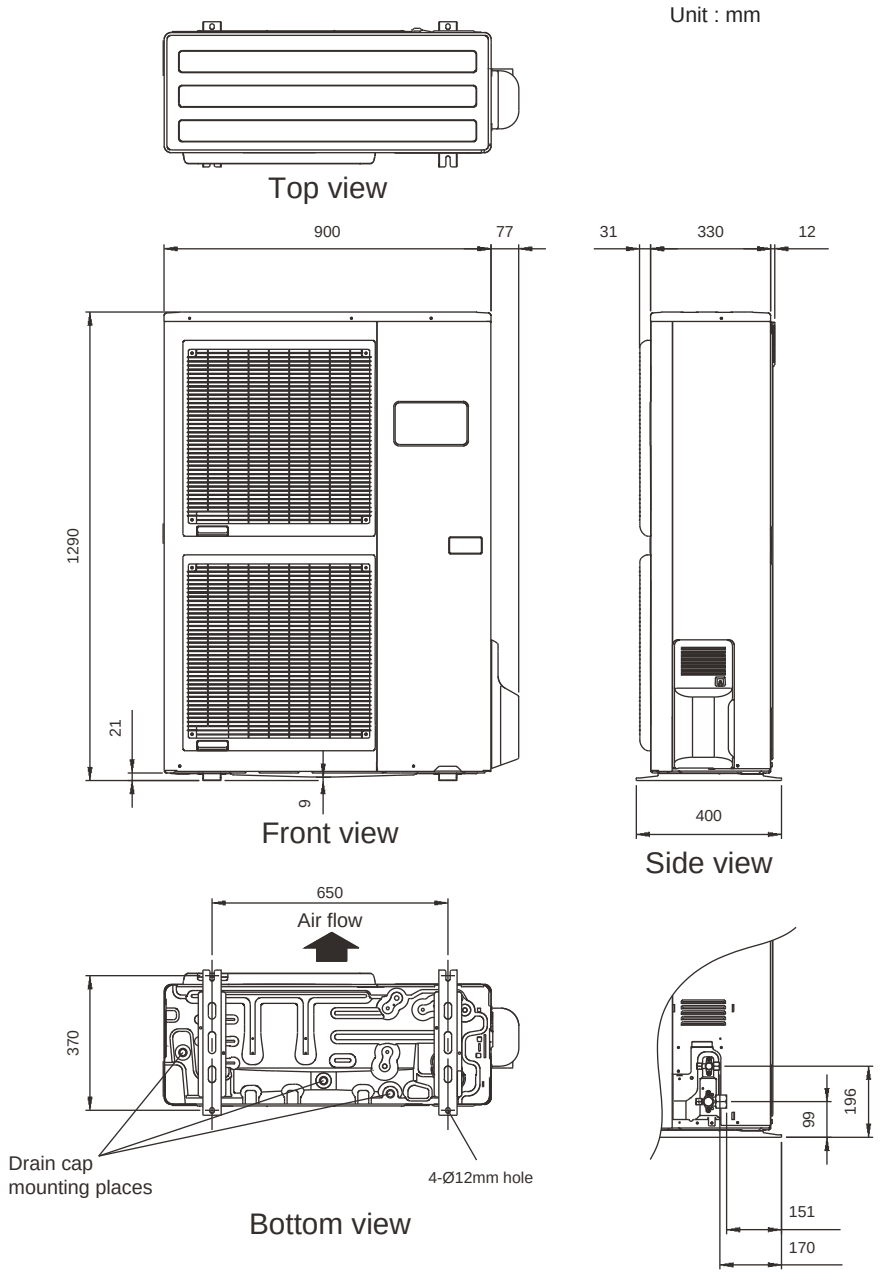

2-3. Installation space requirement

Provide sufficient installation space for product safety.

■ Model: AOGA30FBTAS

● Single outdoor unit installation

- **When the upper space is open:**

Unit: mm

When there are obstacles at the rear only.

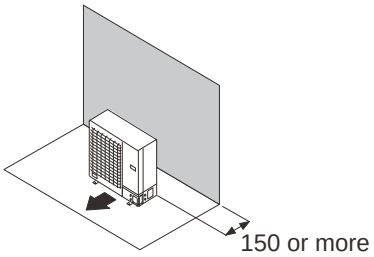

When there are obstacles at the rear and sides.

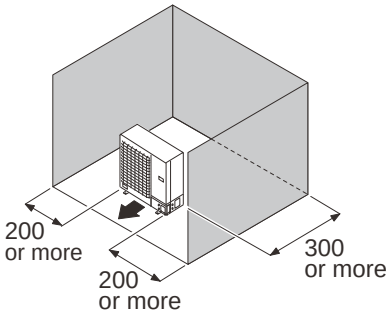

When there are obstacles at the front only.

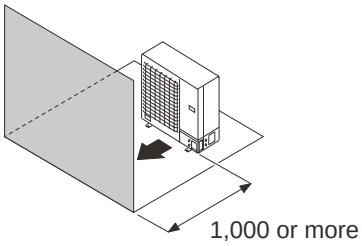

When there are obstacles at the front and rear.

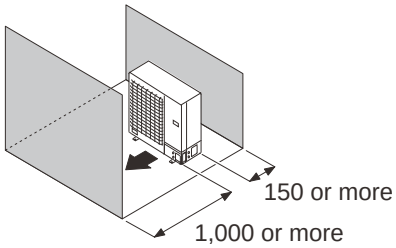

- **When there is an obstruction in the upper space:**

Unit: mm

When there are obstacles at the rear and above.

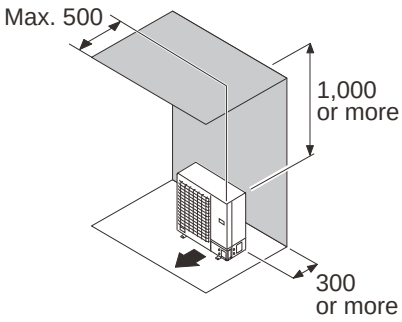

When there are obstacles at the rear, sides, and above.

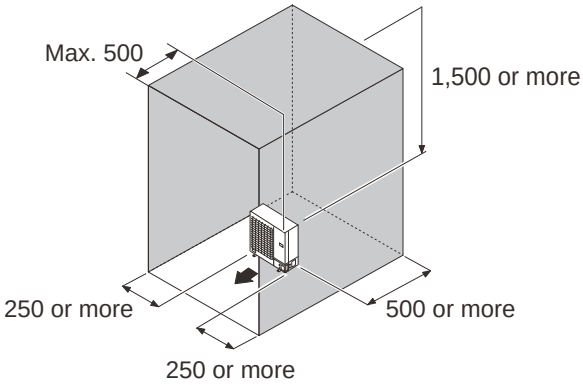

● Multiple outdoor unit installation

- **When the upper space is open:**

Unit: mm

When there are obstacles at the rear only.

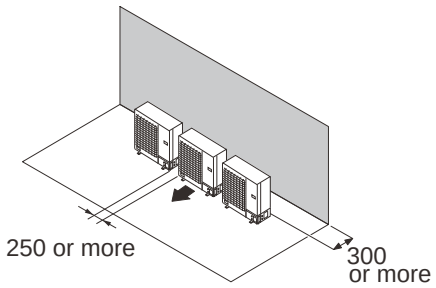

When there are obstacles at the front only.

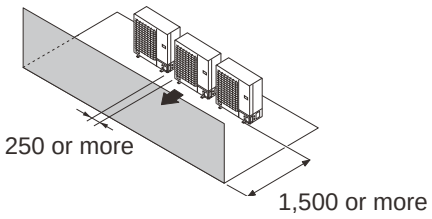

When there are obstacles at the front and rear.

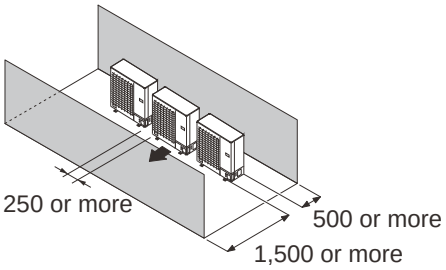

- **When there is an obstruction in the upper space:**

Unit: mm

When there are obstacles at the rear and above.

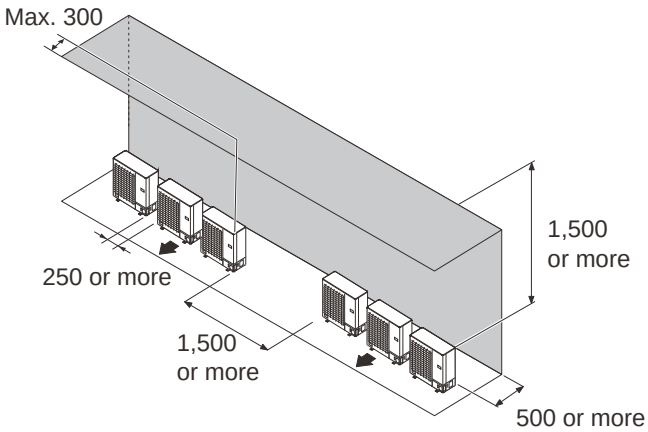

● Outdoor unit installation in multi-row

Unit: mm

Single parallel unit arrangement

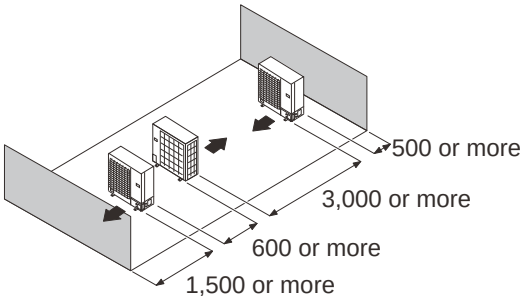

Multiple parallel unit arrangement

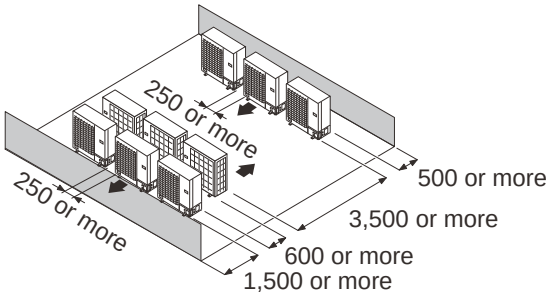

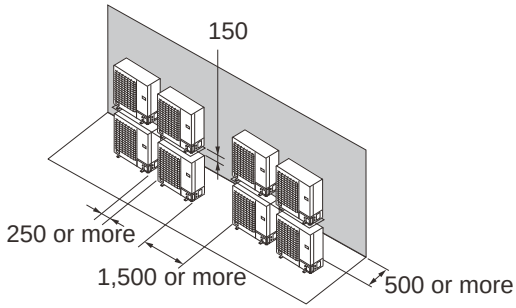

NOTES:

- If the space is larger than stated above, the condition will be the same as when there is no obstacle.
- Height above the floor level should be 50 mm or more.
- When installing the outdoor unit, be sure to open the front and left side to obtain better operation efficiency.

■ Models: AOGA36FRTAS, AOGA45FRTAS, and AOGA60FRTAS

● Single outdoor unit installation

- **When the upper space is open:**

Unit: mm

When there are obstacles at the rear only.

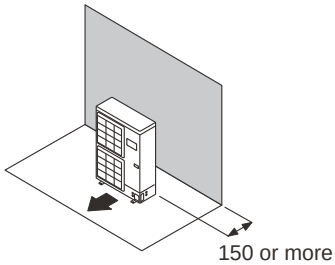

When there are obstacles at the rear and sides.

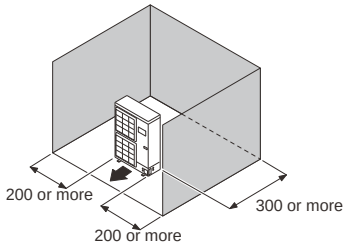

When there are obstacles at the front only.

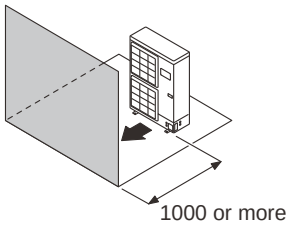

When there are obstacles at the front and rear.

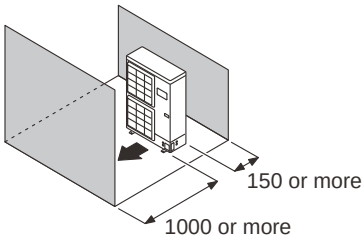

- **When there is an obstruction in the upper space:**

Unit: mm

When there are obstacles at the rear and above.

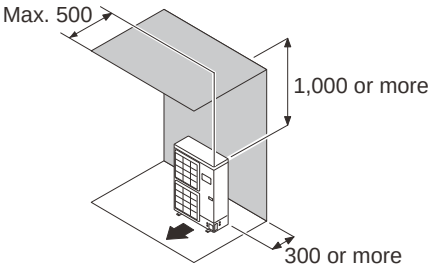

When there are obstacles at the rear, sides, and above.

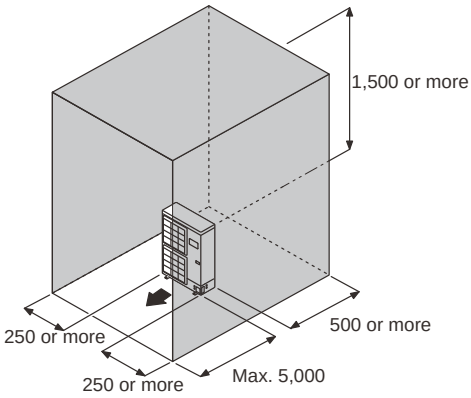

● Multiple outdoor unit installation

- **When the upper space is open:**

Unit: mm

When there are obstacles at the rear only.

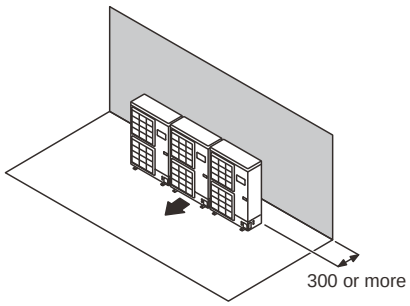

When there are obstacles at the front only.

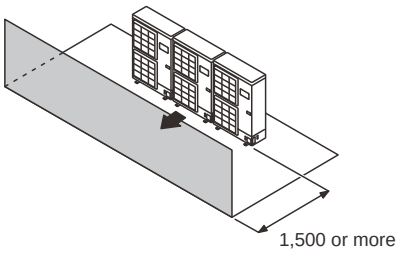

When there are obstacles at the front and rear.

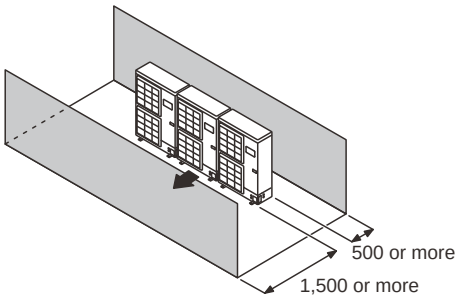

- **When there is an obstruction in the upper space:**

Unit: mm

When there are obstacles at the rear and above.

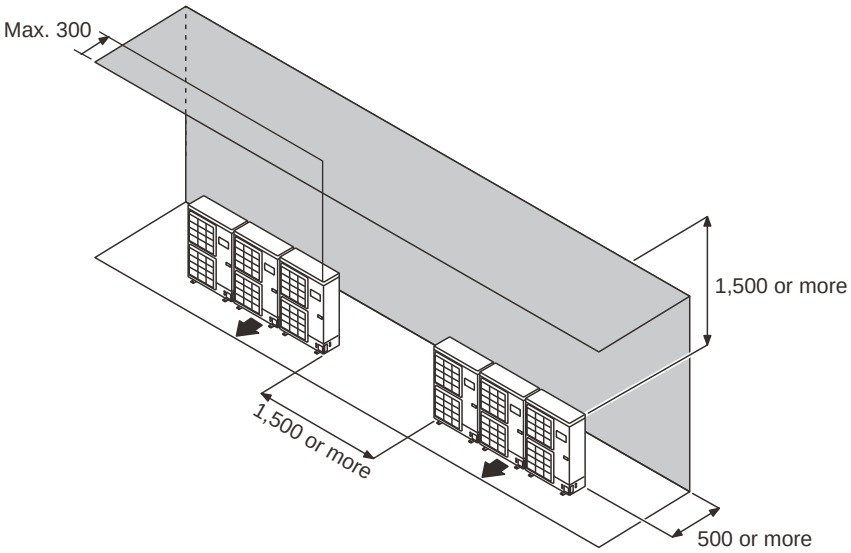

● Outdoor unit installation in multi-row

Unit: mm

Single parallel unit arrangement

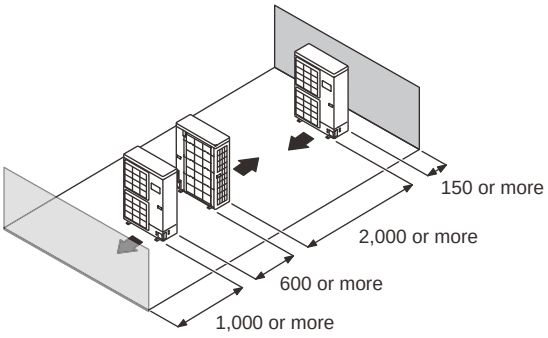

Multiple parallel unit arrangement

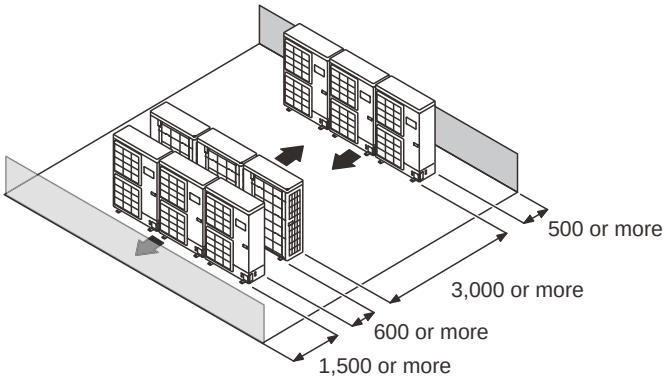

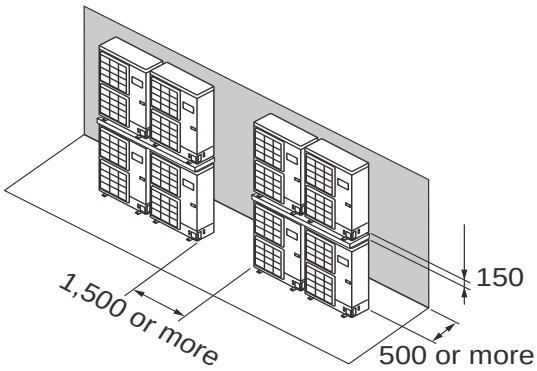

NOTES:

- If the space is larger than stated above, the condition will be the same as when there is no obstacle.
- Height above the floor level should be 50 mm or more.
- When installing the outdoor unit, be sure to open the front and left side to obtain better operation efficiency.

3. Refrigerant circuit

3-1. Model: AOGA30FBTAS

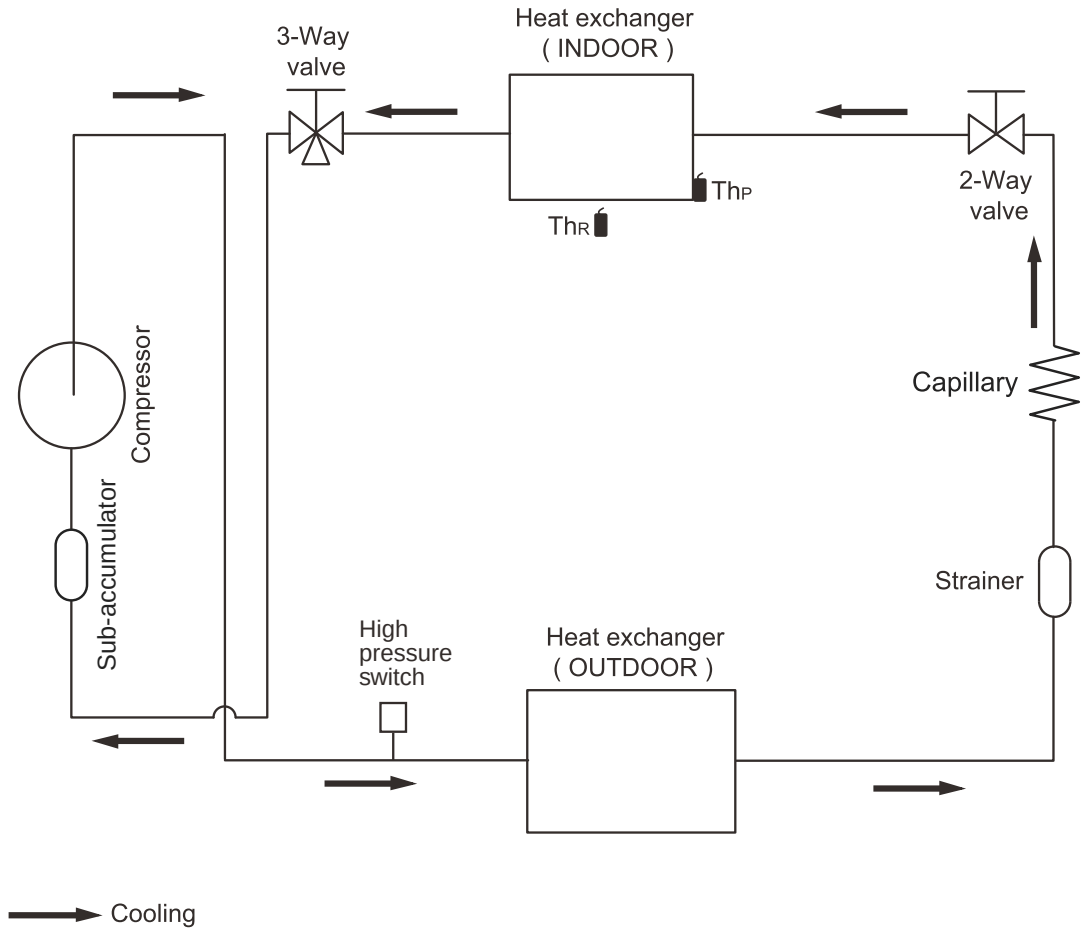

ThR : Thermistor (Room Temp.)

ThP : Thermistor (Pipe Temp.)

3-2. Models: AOGA36FRTAS, AOGA45FRTAS, and AOGA60-FRTAS

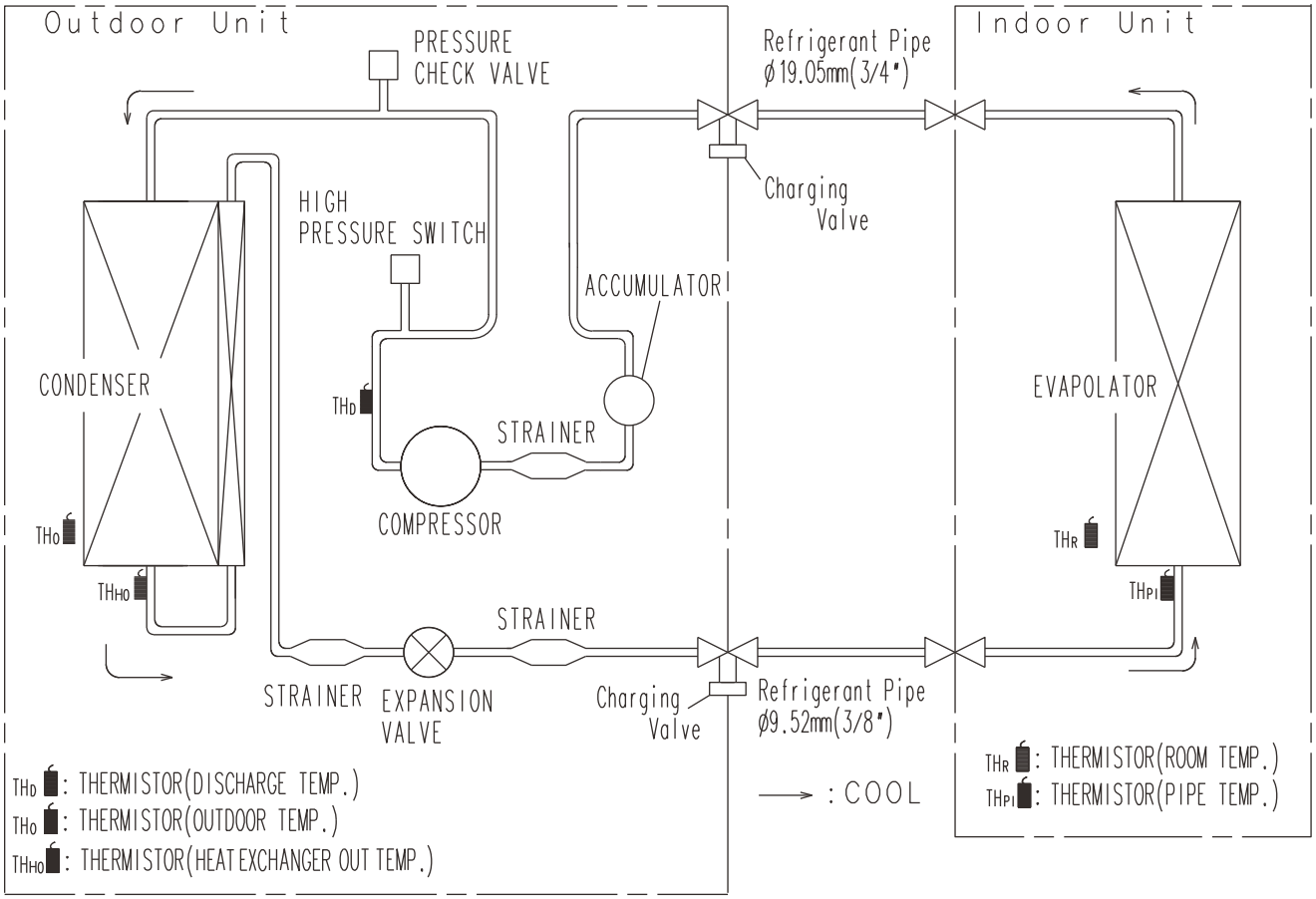

4. Wiring diagrams

4-1. Model: AOGA30FBTAS

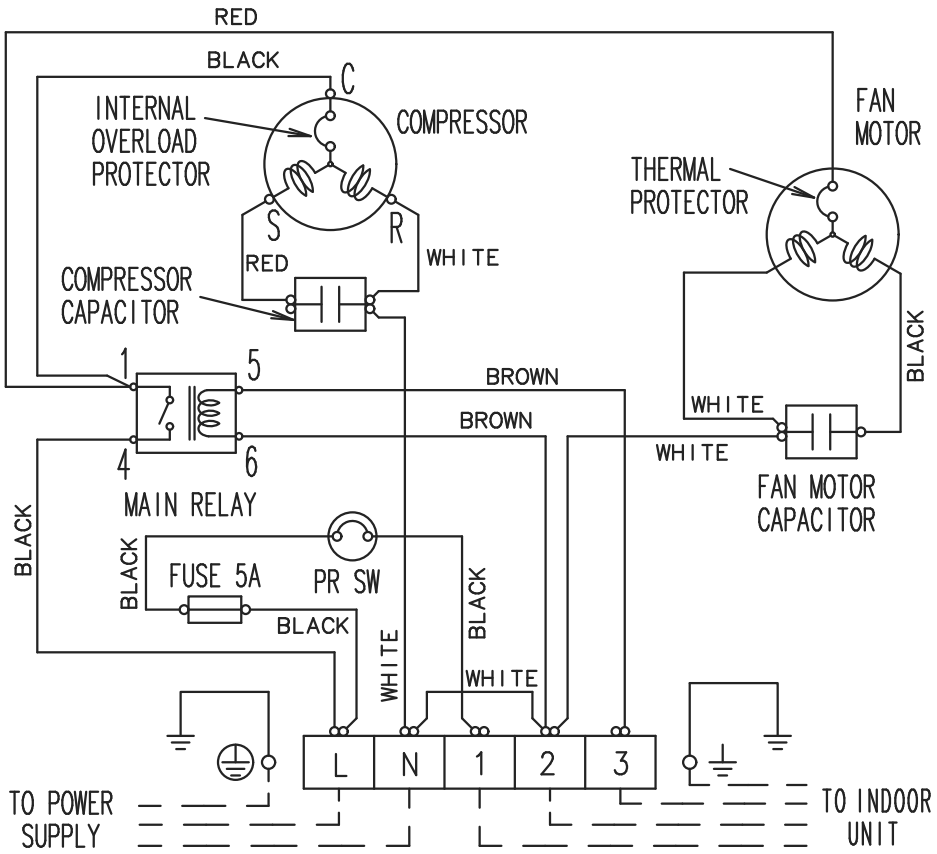

4-2. Models: AOGA36FRTAS, AOGA45FRTAS, and AOGA60-FRTAS

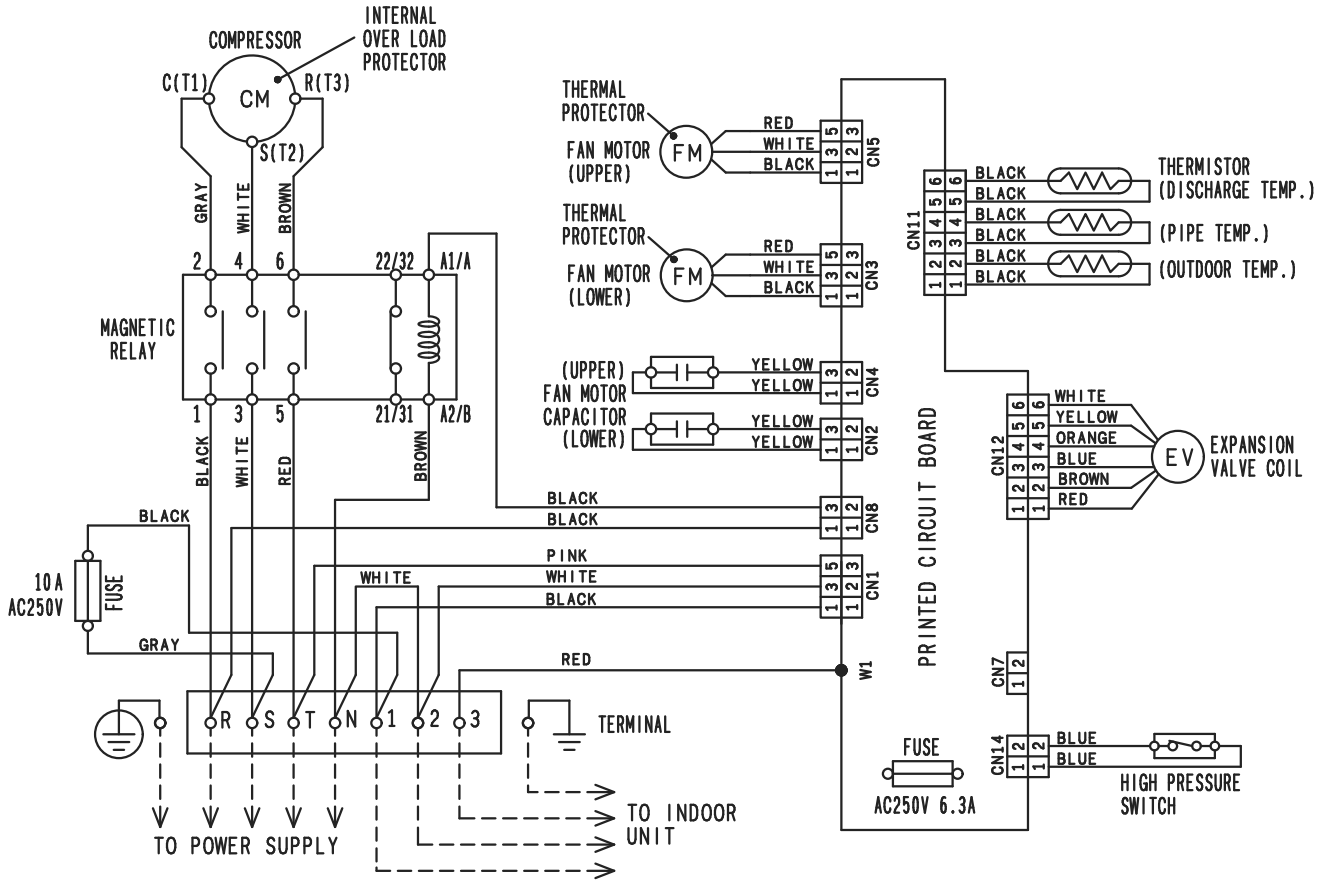

5. Capacity compensation rate for pipe length and height difference

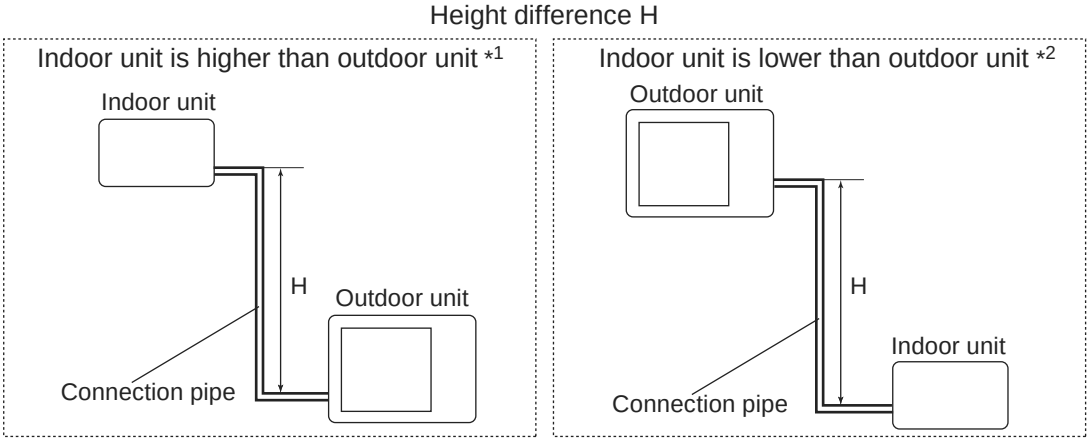

5-1. Model: AOGA30FBTAS

NOTE: Values mentioned in the table are calculated based on the maximum capacity.

COOLING			Pipe length (m)					
			5	7.5	10	15	20	30
Height difference H (m)	Indoor unit is higher than outdoor unit *1	15	-	-	-	0.988	0.979	0.963
		10	-	-	0.996	0.988	0.979	0.963
		7.5	-	1.000	0.996	0.988	0.979	0.963
		5	1.027	1.000	0.996	0.988	0.979	0.963
		0	1.027	1.000	0.996	0.988	0.979	0.963
	Indoor unit is lower than outdoor unit *2	-5	1.018	0.992	0.988	0.980	0.972	0.955
		-7.5	-	0.988	0.984	0.976	0.968	0.951
		-10	-	-	0.980	0.972	0.965	0.948
		-15	-	-	-	0.964	0.956	0.940

5-2. Models: AOGA36FRTAS, AOGA45FRTAS, and AOGA60-FRTAS

NOTE: Values mentioned in the table are calculated based on the maximum capacity.

COOLING			Pipe length (m)						
			5	7.5	10	20	30	40	50
Height difference H (m)	Indoor unit is higher than outdoor unit *1	30	-	-	-	-	0.893	0.867	0.840
		25	-	-	-	-	0.893	0.867	0.840
		20	-	-	-	0.919	0.893	0.867	0.840
		15	-	-	-	0.919	0.893	0.867	0.840
		10	-	-	0.985	0.919	0.893	0.867	0.840
		7.5	-	1.000	0.985	0.919	0.893	0.867	0.840
		5	1.014	1.000	0.985	0.919	0.893	0.867	0.840
		0	1.014	1.000	0.985	0.919	0.893	0.867	0.840
	Indoor unit is lower than outdoor unit *2	-5	1.005	0.992	0.977	0.912	0.886	0.860	0.834
		-7.5	-	0.988	0.973	0.908	0.882	0.856	0.830
		-10	-	-	0.969	0.905	0.879	0.853	0.827
		-15	-	-	-	0.897	0.872	0.846	0.820
		-20	-	-	-	0.890	0.864	0.839	0.814
		-25	-	-	-	-	0.857	0.832	0.807
		-30	-	-	-	-	0.850	0.825	0.800

6. Additional charge calculation

6-1. Model: AOGA30FBTAS

Refrigerant type		R410A
Factory charge amount	g	2500

■ Refrigerant charge

Total pipe length	m	7.5 or less	10	20	30 (Max.)	20 g/m
Additional charge amount	g	0	50	250	450	

6-2. Models: AOGA36FRTAS and AOGA45FRTAS

Refrigerant type		R410A
Factory charge amount	g	3400

■ Refrigerant charge

Total pipe length	m	20 or less	30	40	50 (Max.)	40 g/m
Additional charge amount	g	0	400	800	1200	

6-3. Model: AOGA60FRTAS

Refrigerant type		R410A
Factory charge amount	g	4300

■ Refrigerant charge

Total pipe length	m	20 or less	30	40	50 (Max.)	40 g/m
Additional charge amount	g	0	400	800	1200	

7. Airflow

7-1. Model: AOGA30FBTAS

● Cooling

Airflow	
m^3/h	4400—4400
l/s	1222—1222
CFM	2590—2590

7-2. Models: AOGA36FRTAS, AOGA45FRTAS, and AOGA60-FRTAS

● Cooling

Airflow	
m^3/h	5700—6100
l/s	1583—1695
CFM	3355—3590

8. Operation noise (sound pressure)

8-1. Noise level curve

■ Model: AOGA30FBTAS

● Cooling

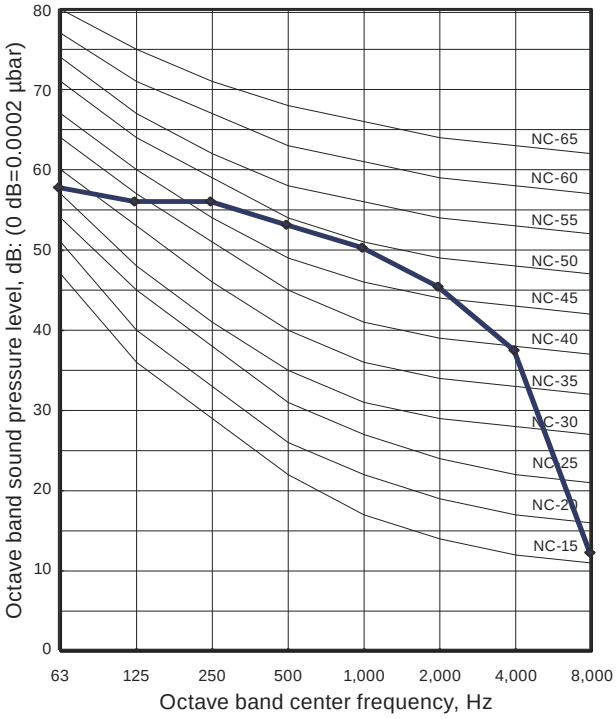

■ Model: AOGA36FRTAS

● Cooling

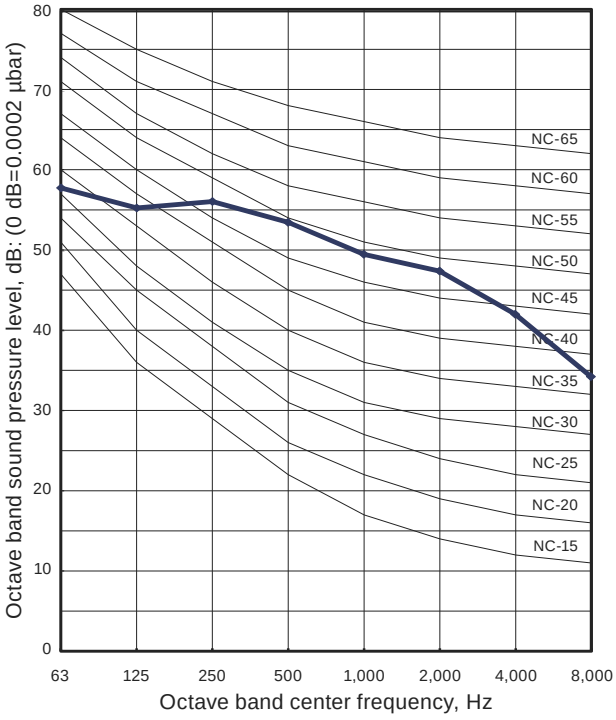

■ Model: AOGA45FRTAS

● Cooling

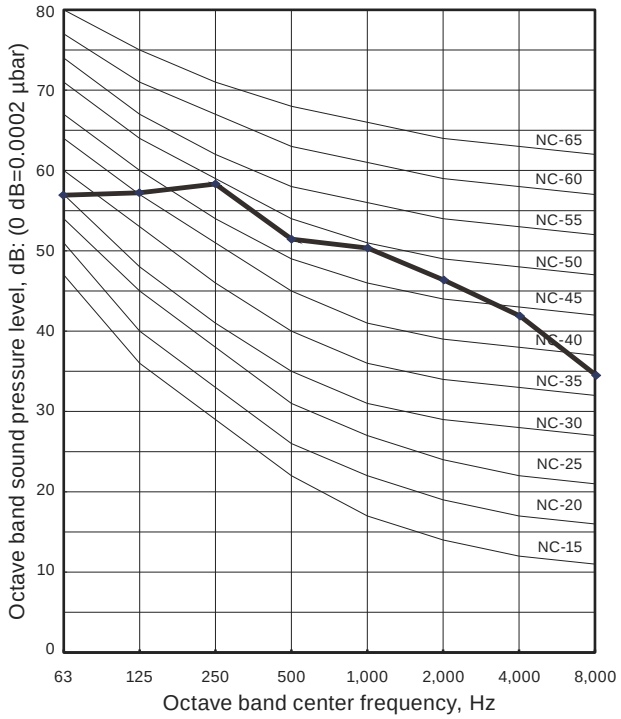

■ Model: AOGA60FRTAS

● Cooling

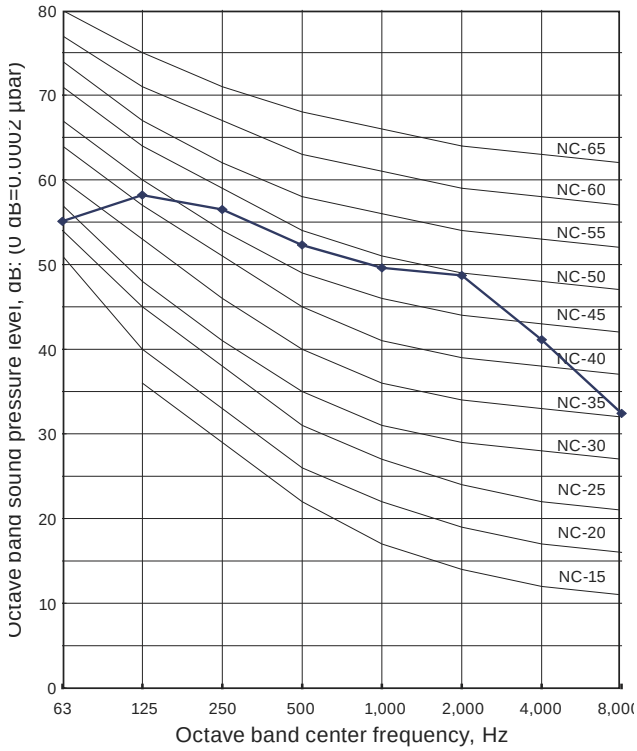

8-2. Sound level check point

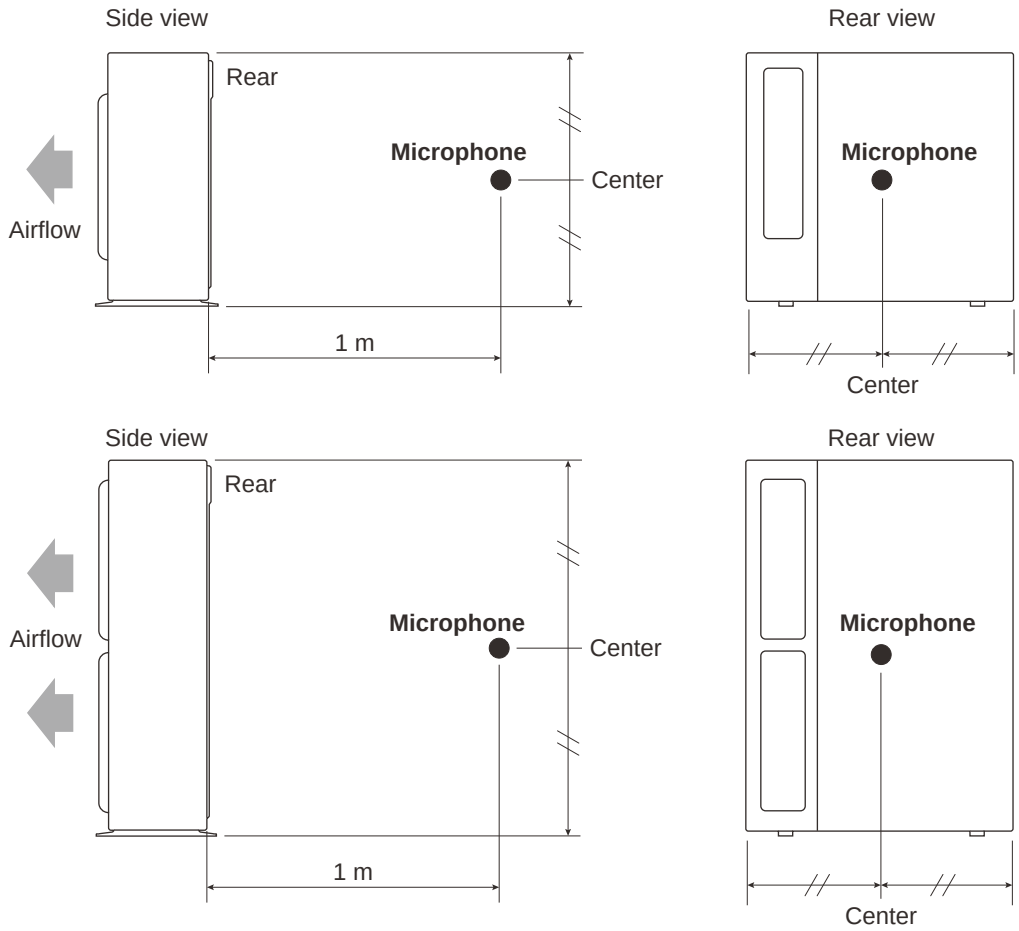

NOTE: Detailed shape of the actual outdoor unit might be slightly different from the one illustrated above.

9. Electrical characteristics

Model name			AOGA30FBTAS	AOGA36FRTAS	AOGA45FRTAS	AOGA60FRTAS
Power supply	Voltage	V	220—240 ~	3N 380—415 ~		
	Frequency	Hz	50			
Max operating current *1		A	23.0	10.5	14.0	15.5
Starting current		A	60	43	47	67
Wiring spec. *2	Circuit breaker current	A	30	20		
	Earth leakage breaker	mA	30 (0.1 sec or less)			
	Power cable	mm^2	3.5—4.0	2.5—4.0		
	Connection cable *3	mm^2	1.5—2.5	1.0—2.5		
	Limited wiring length	m	31	51		

*1: Maximum current is the total current of the indoor unit and the outdoor unit.

*2: Selected sample based on Japan Electrotechnical Standards and Codes Committee E0005. As the regulations of wire size and circuit breaker differ in each country or region, select appropriate devices complied to the regional standard.

*3: Limit voltage drop to less than 2%. If voltage drop is 2% or more, increase cable conductor size.

10. Safety devices

Type of protection	Protection form		Model
			AOGA30FBTAS
Circuit protection	Current fuse (Near the terminal)		250 V, 5 A
	Current fuse (Main PCB)		250 V, 6.3 A
Fan motor protection	Thermal protection program	Activate	150 ± 5 °C Fan motor stop
		Reset	96 ± 15 °C Fan motor restart
High pressure protection	High pressure switch	Activate	4.9 MPa Compressor stop
		Reset	3.8 MPa Compressor restart
Compressor protection	Internal inherent motor protection	Activate	110 ± 5 °C Compressor stop
		Reset	61 ± 9 °C Compressor restart First cycle trip: 51 A
	Pressure relief valve (differential pressure range)	Activate	3.9—4.2 MPa

Type of protection	Protection form		Model		
			AOGA36FRTAS	AOGA45FRTAS	AOGA60FRTAS
Circuit protection	Current fuse (Near the terminal)		250 V, 5 A		250 V, 10 A
	Current fuse (Main PC board)		250 V, 6.3 A		
Fan motor protection	Thermal protection program	Activate	150± 5 °C Fan motor stop		
		Reset	96± 15 °C Fan motor restart		
High pressure protection	High pressure switch	Activate	4.9 MPa Compressor stop		
		Reset	3.8 MPa Compressor restart		
Compressor protection	Thermal protection program (Discharge temp.)	Activate	120 °C Compressor stop		
		Reset	After 3 minutes and 90 °C or less Compressor restart		
	Internal inherent motor protection	Activate	120 ± 5 °C Compressor stop	145 ± 5 °C Compressor stop	125 ± 5 °C Compressor stop
		Reset	61 ± 9 °C Compressor restart First cycle trip: 37 A	61 ± 9 °C Compressor restart First cycle trip: 41 A	61 ± 9 °C Compressor restart First cycle trip: 51 A
	Pressure relief valve (differential pressure range)	Activate	3.9—4.2 MPa		